Ergo-Series EE6G Barrel Sauna

Full Glass Front 63D" x 90H"

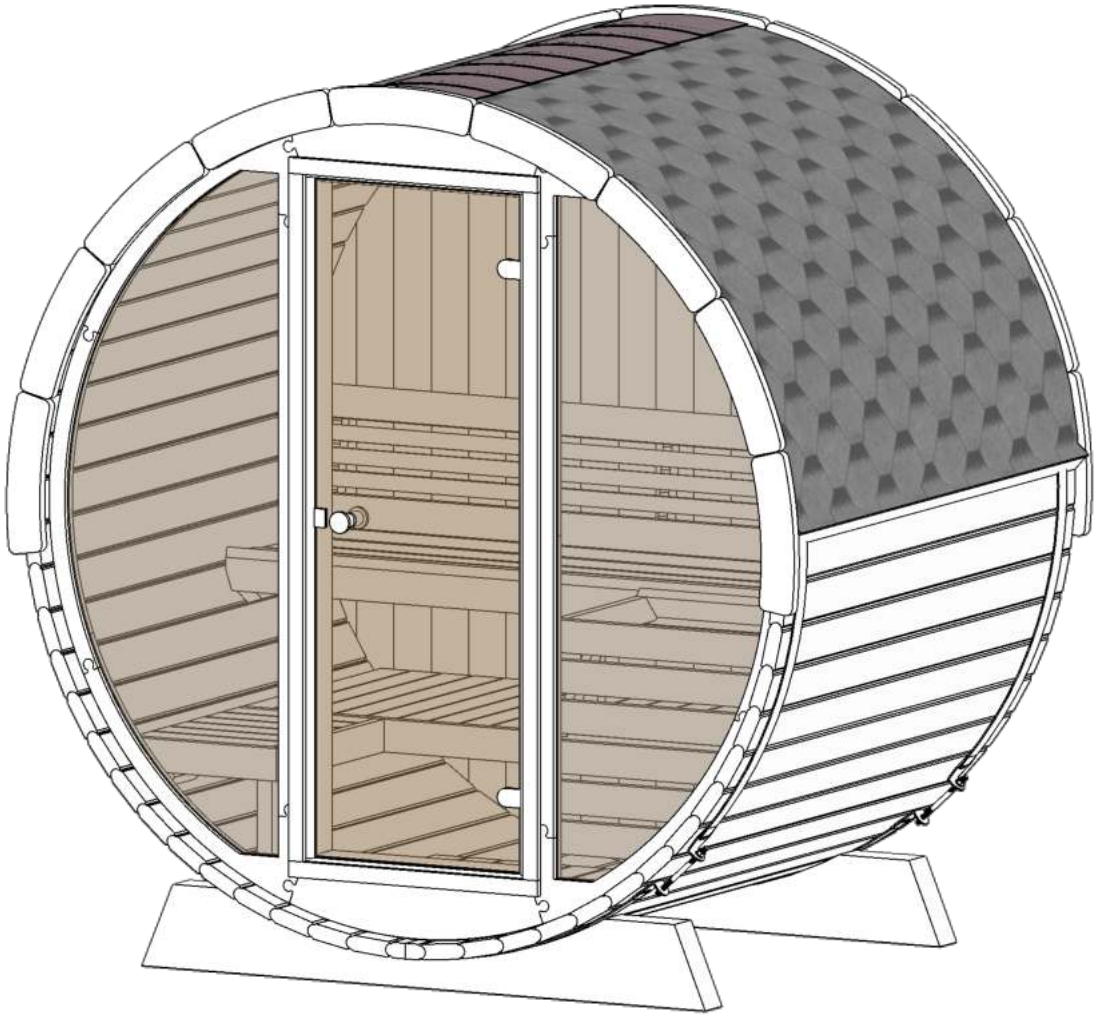

Note: Please read manual before construction

Rev: 1.0_9/2023

Front & Back Walls

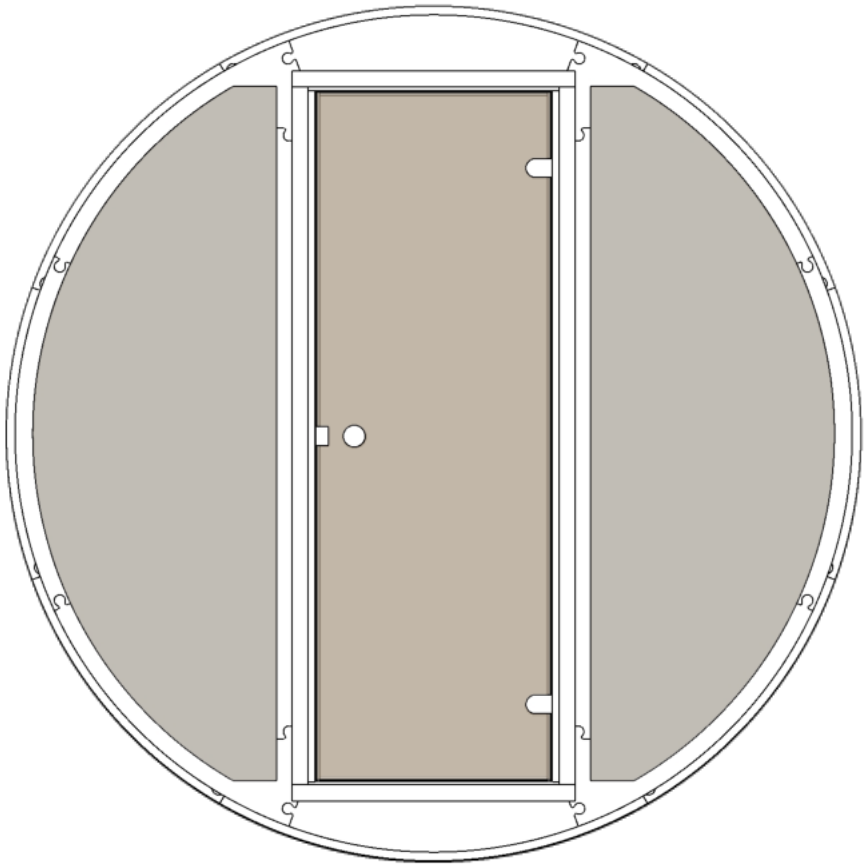

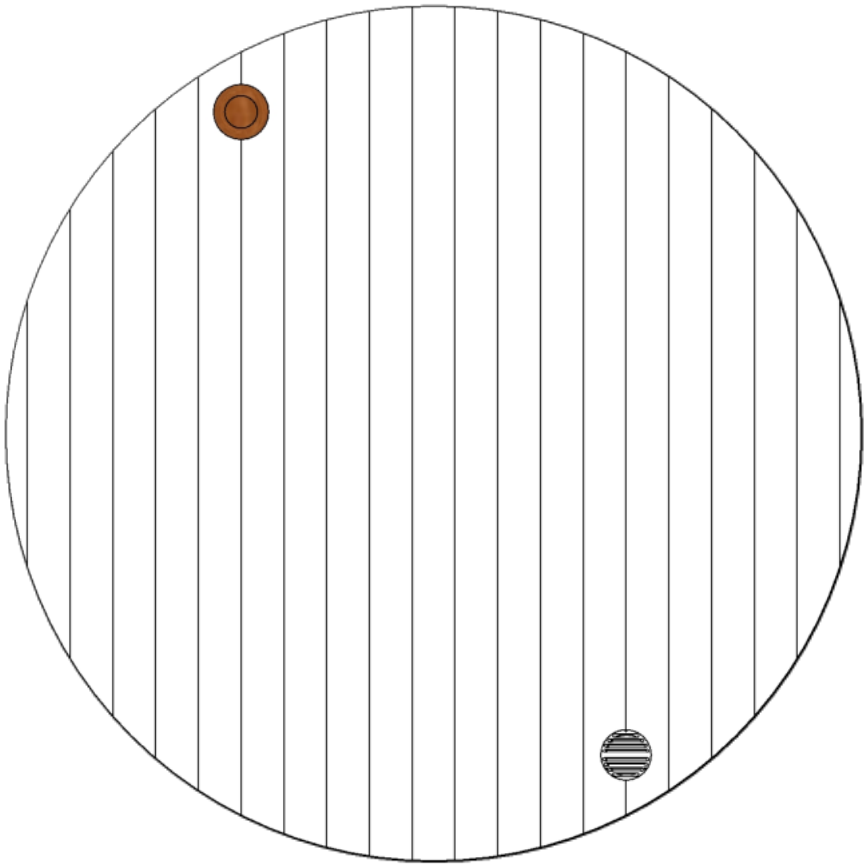

EE6G Barrel Sauna 63D" x 90H"

Details list 1.

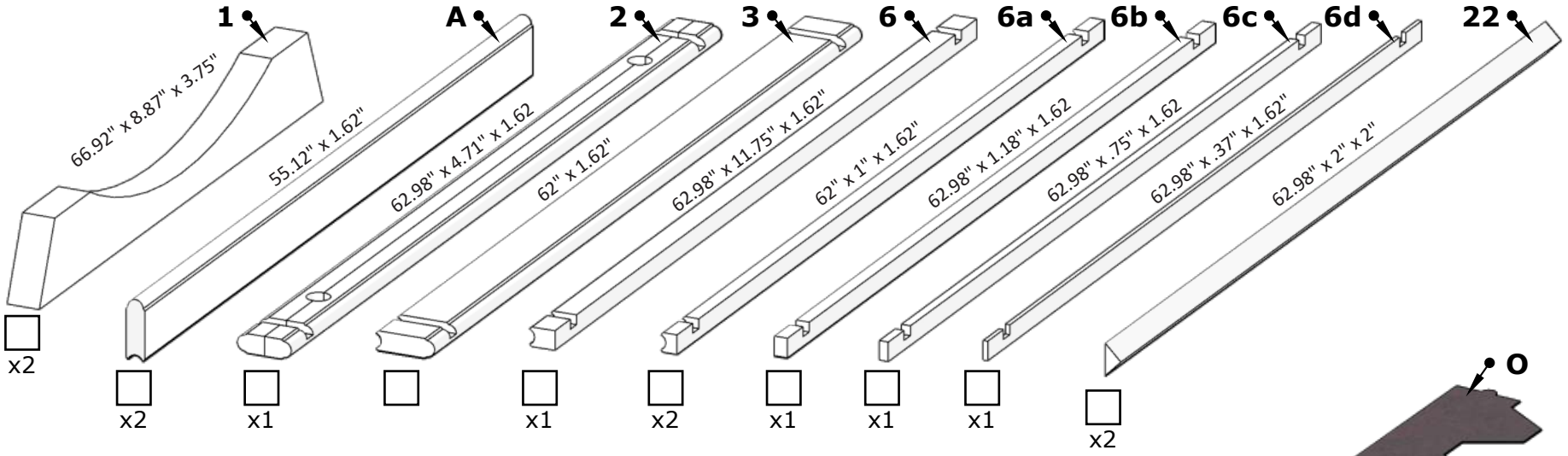

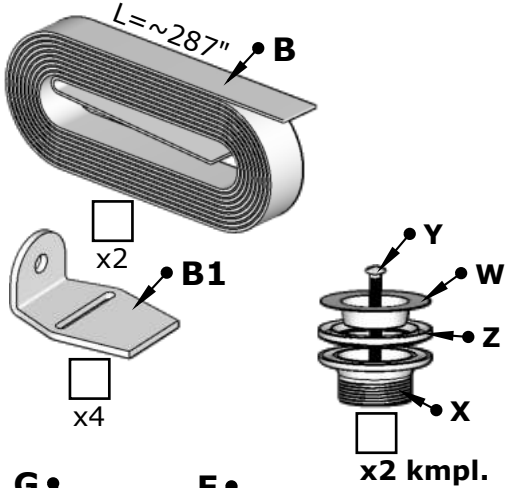

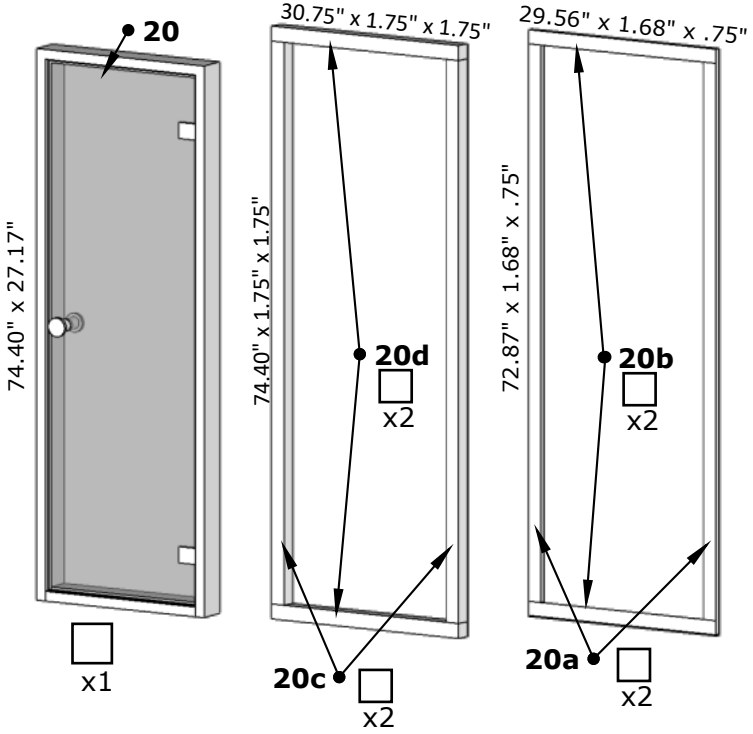

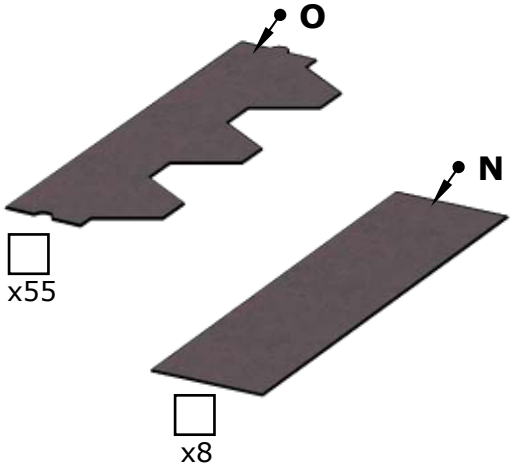

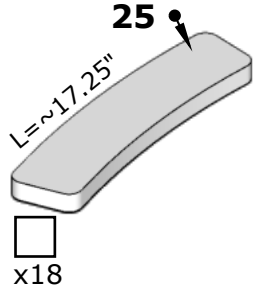

EE6G Barrel Sauna 63D" x 90H"

Details list 2.

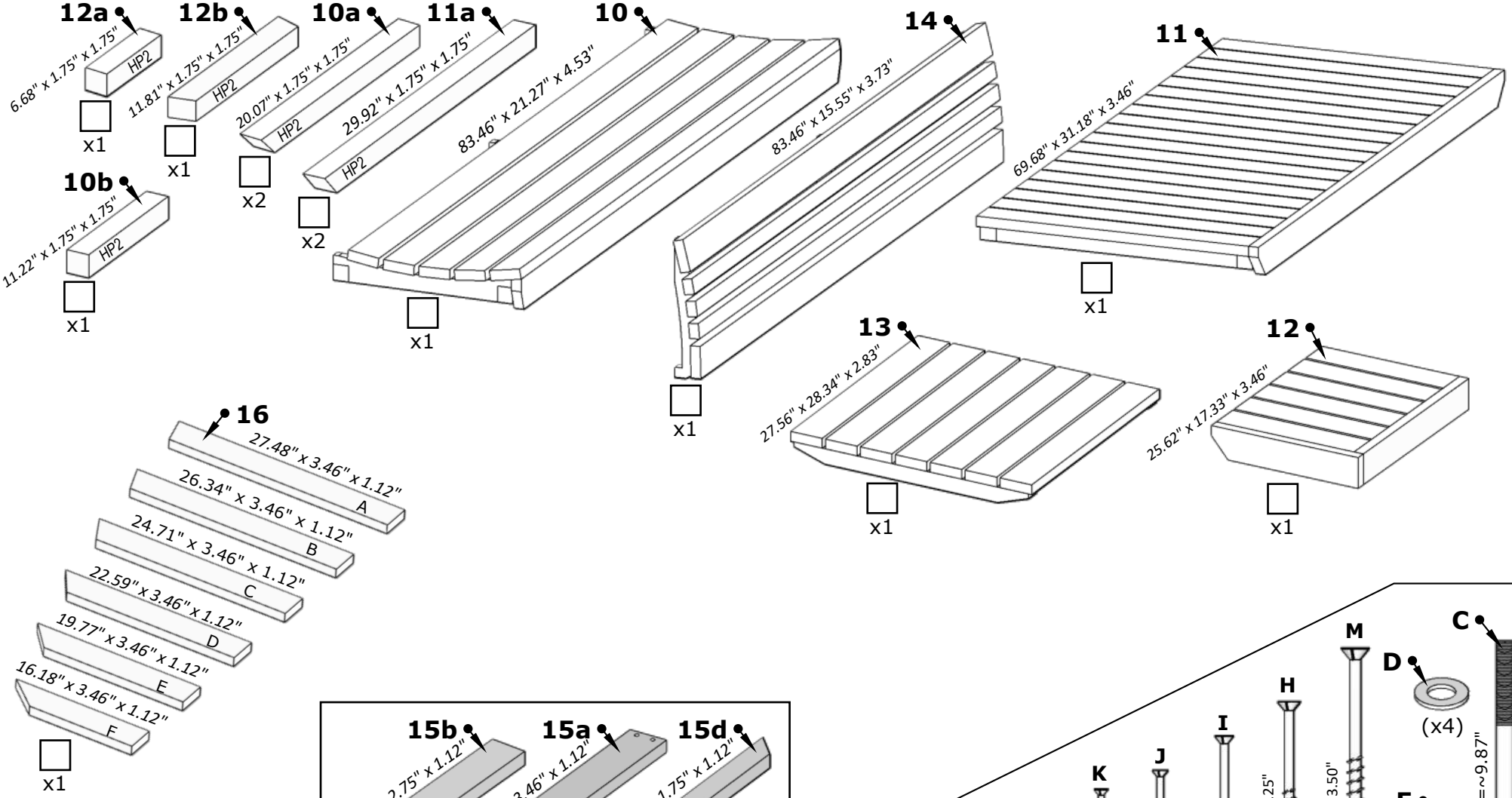

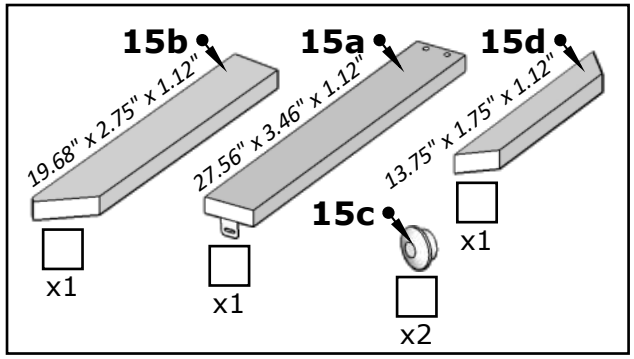

Tools needed



Measuring tape

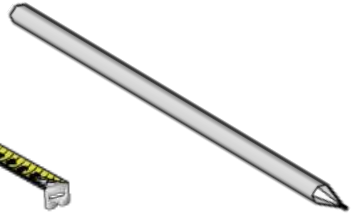

Marker pen

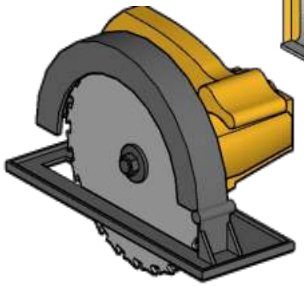

Circular saw

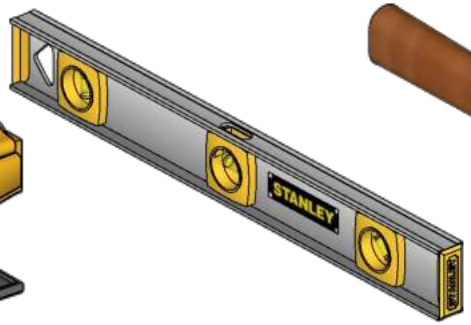

Water level

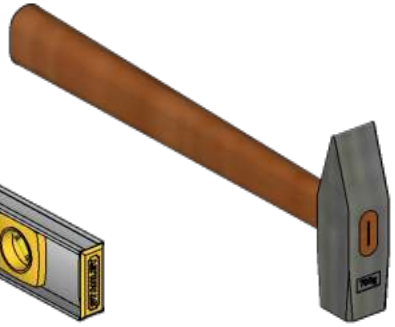

Hammer



Extra hands



Ratchet strap



Silicone gun
(Only glass-wall models)



Drill

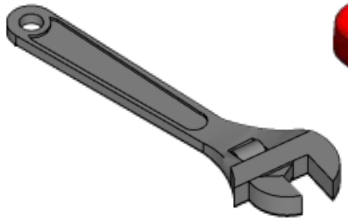

Cresent wrench



Utility knife

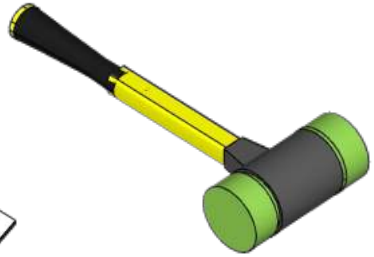

Rubber mallet

Front glass wall installation

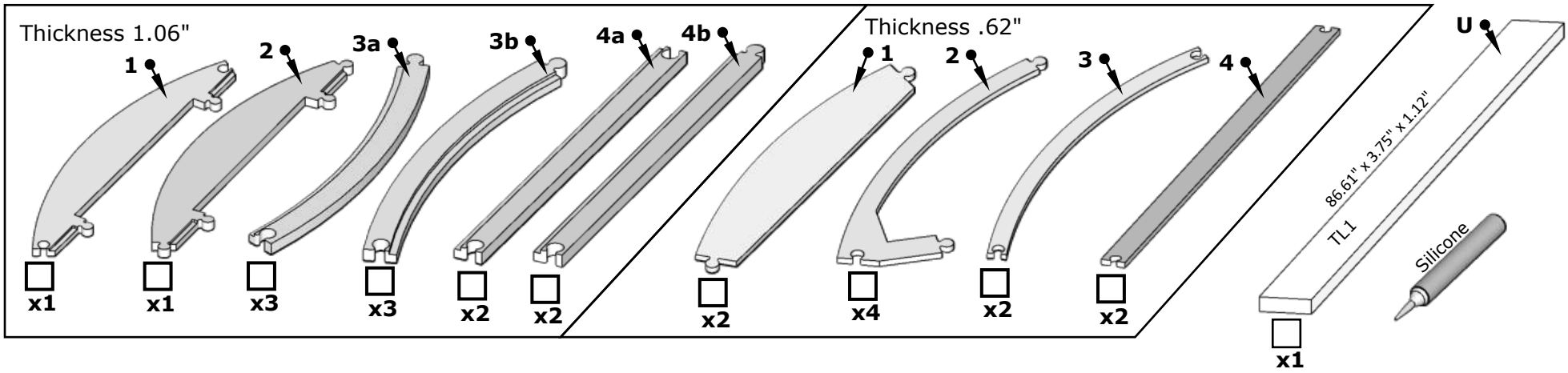

Baseframe 1.06"

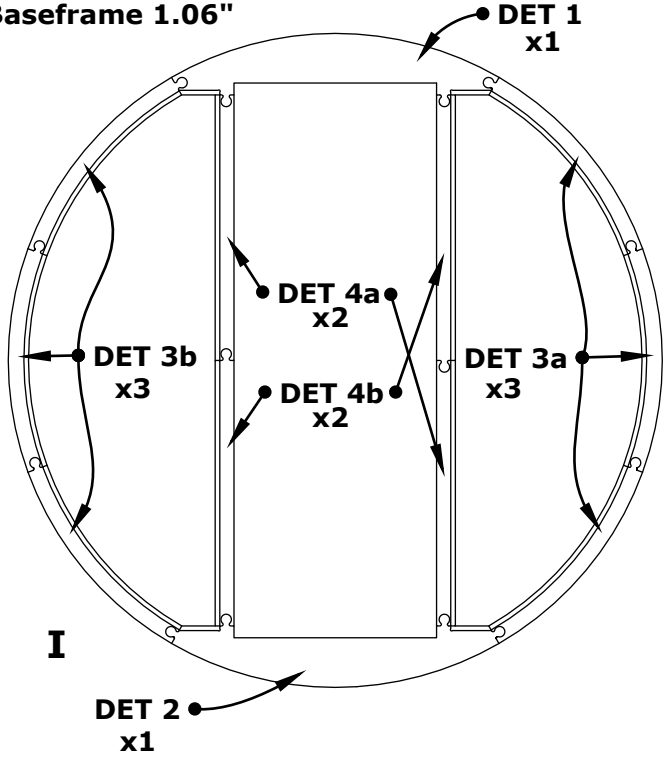

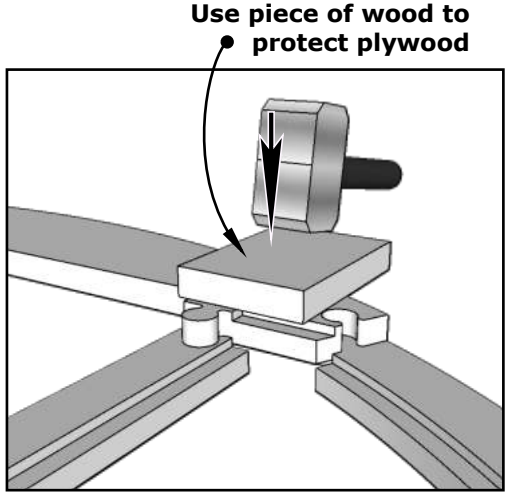

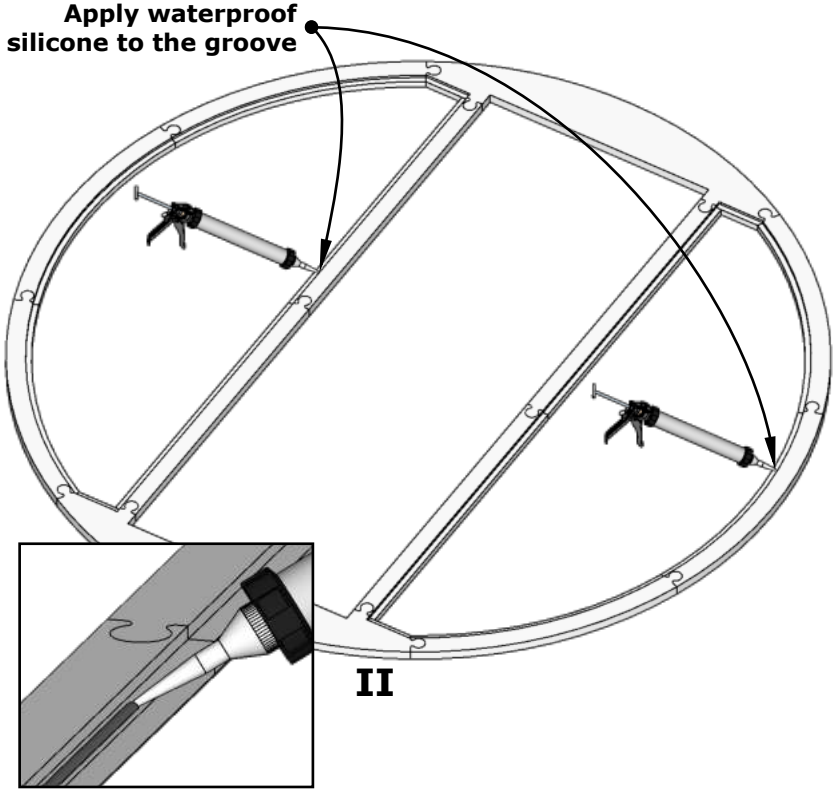

Front glass wall installation

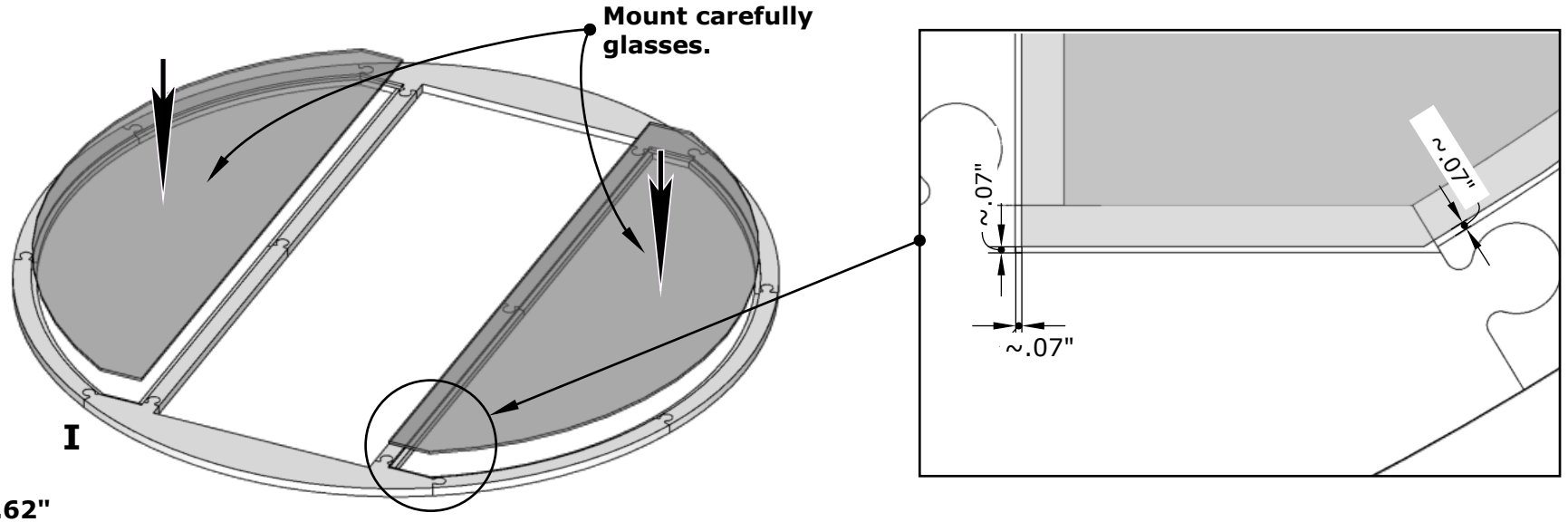

Coverframe .62"

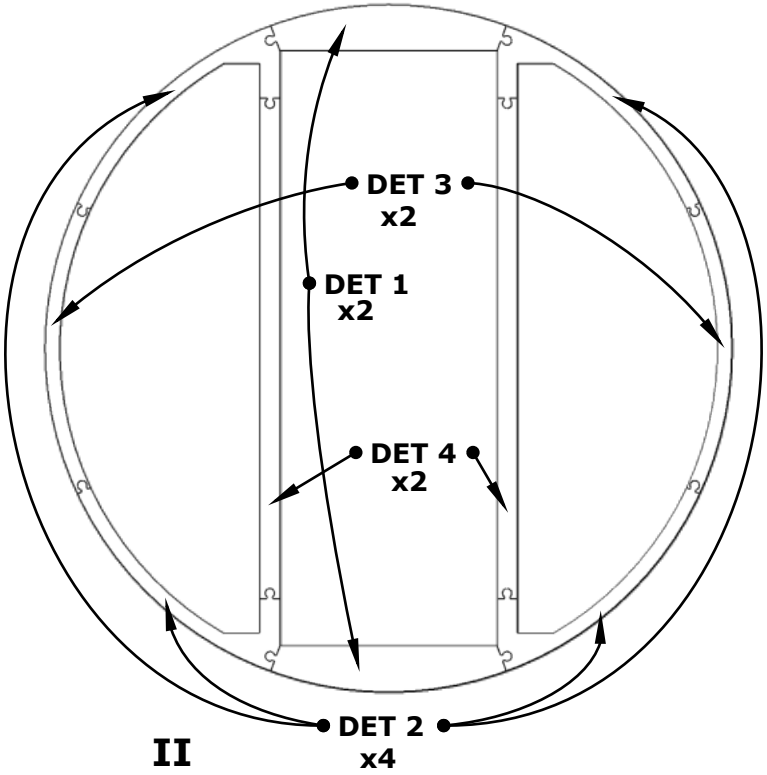

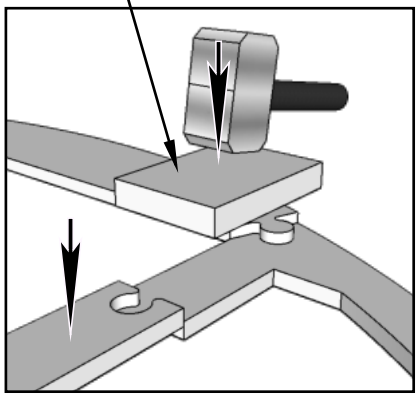

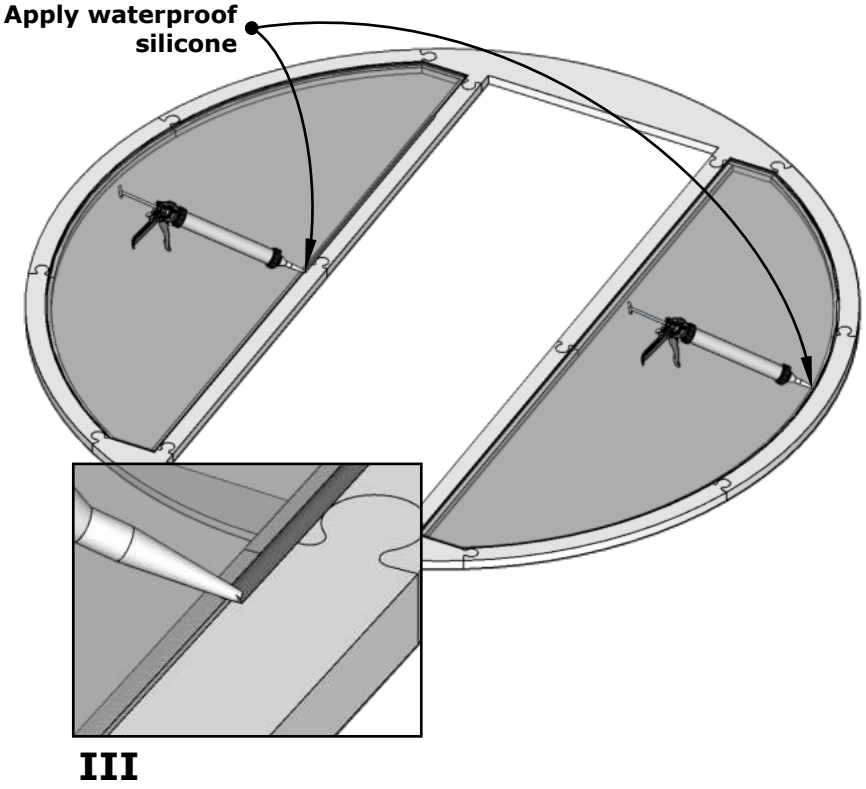

Front glass wall installation

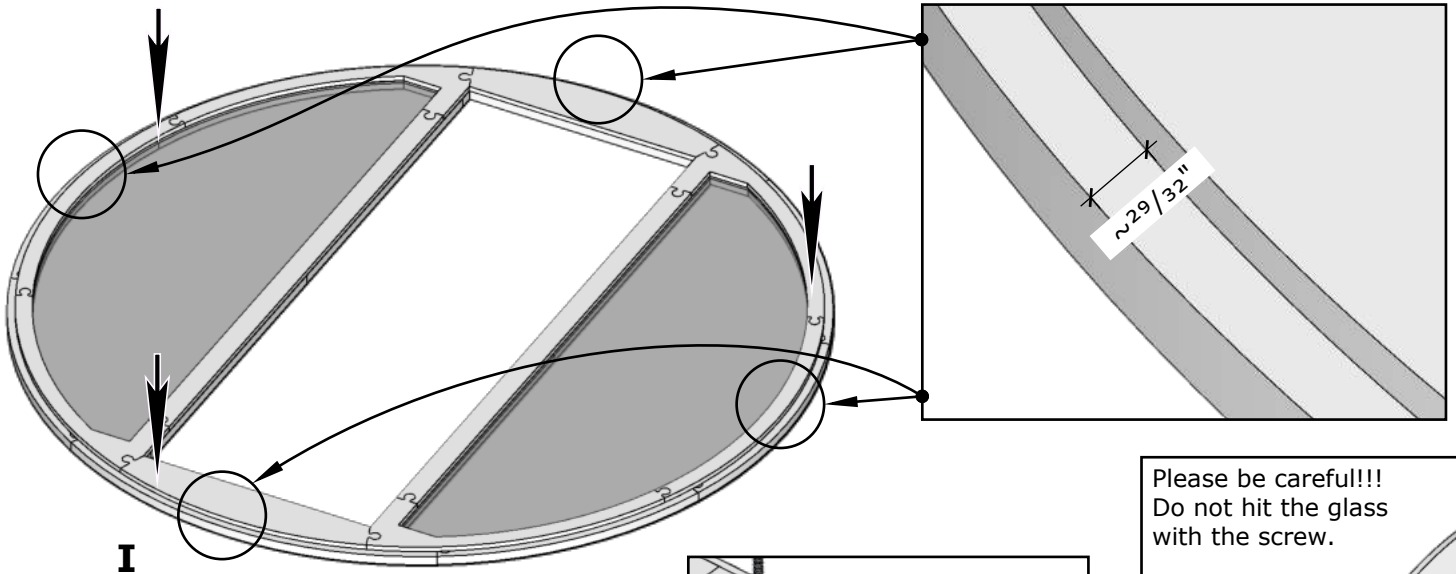

I

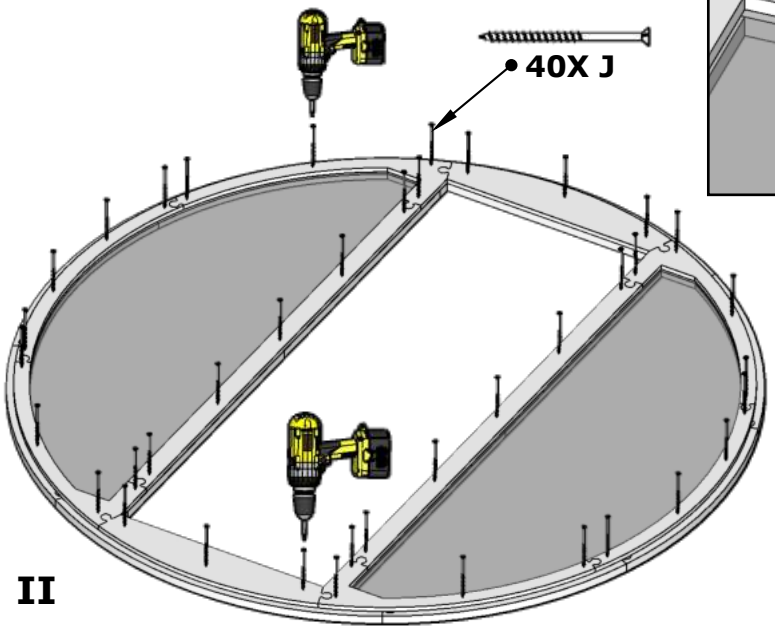

II

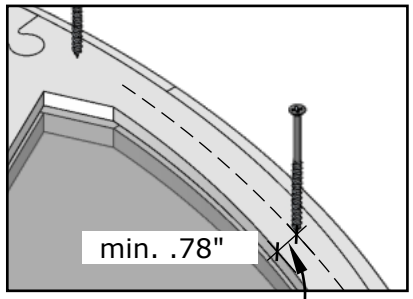

Please be careful!!!
Do not hit the glass
with the screw.

DET U
Fix it diagonally to make wall more rigid during the installation.

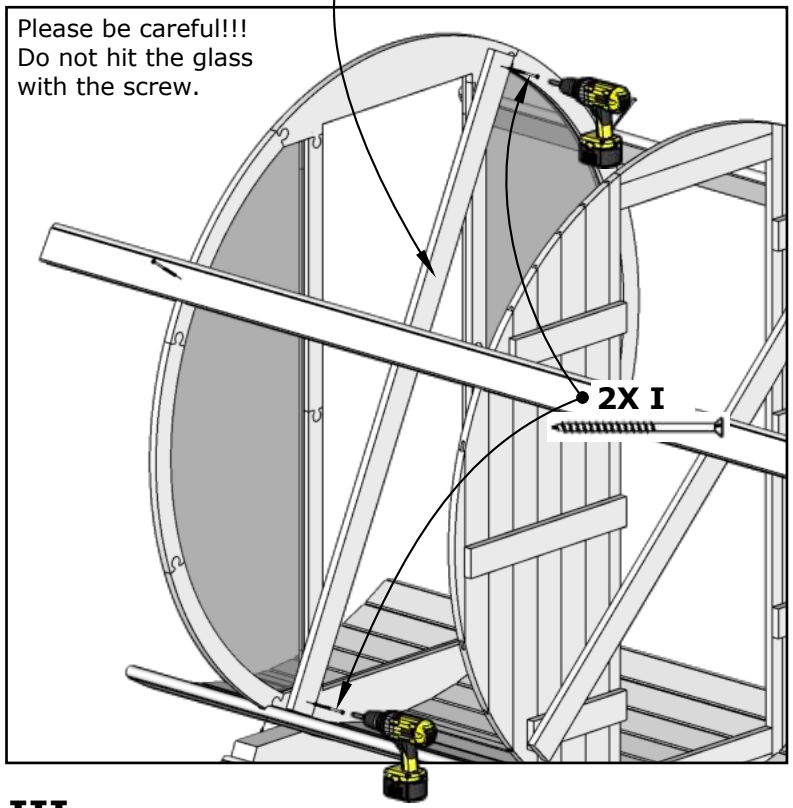

III

Wooden back wall assembly

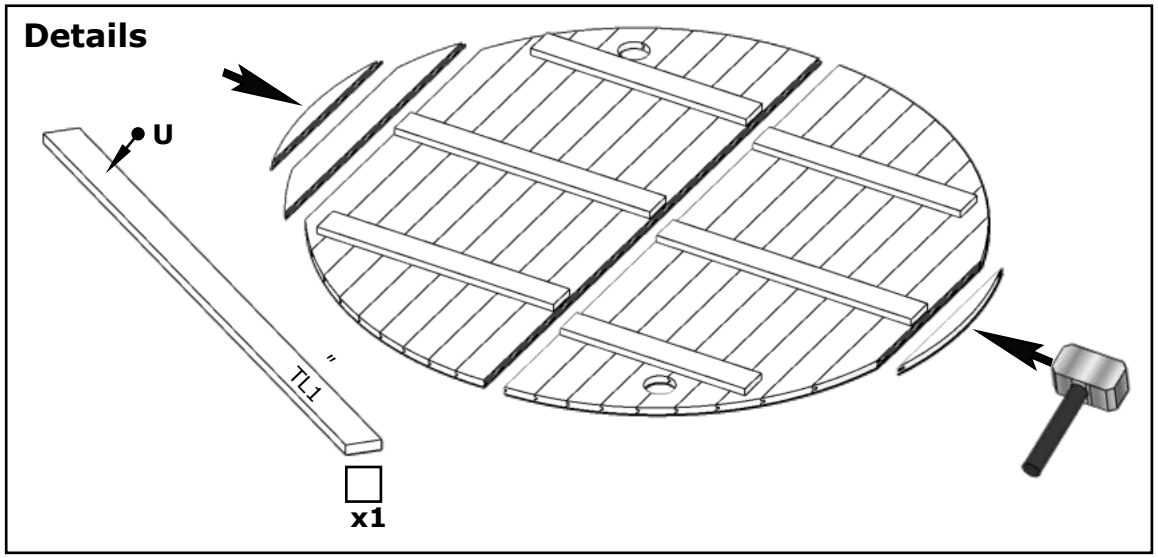

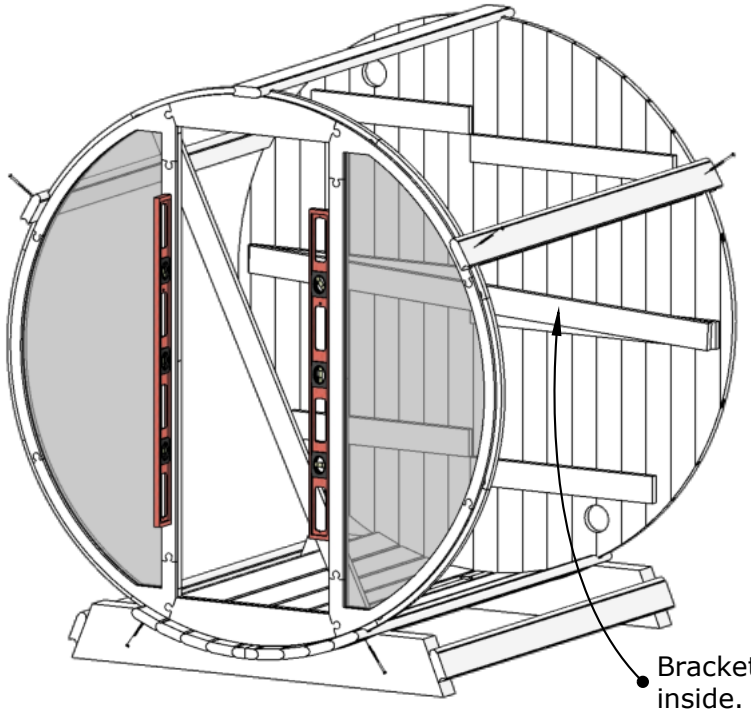

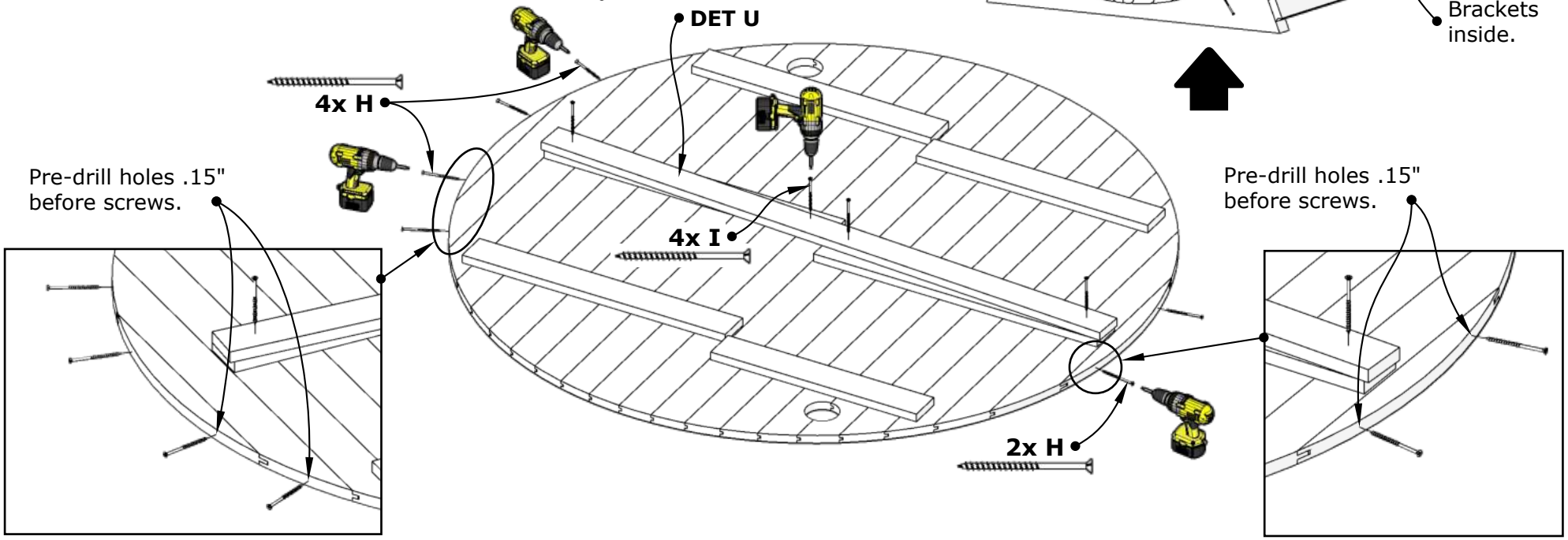

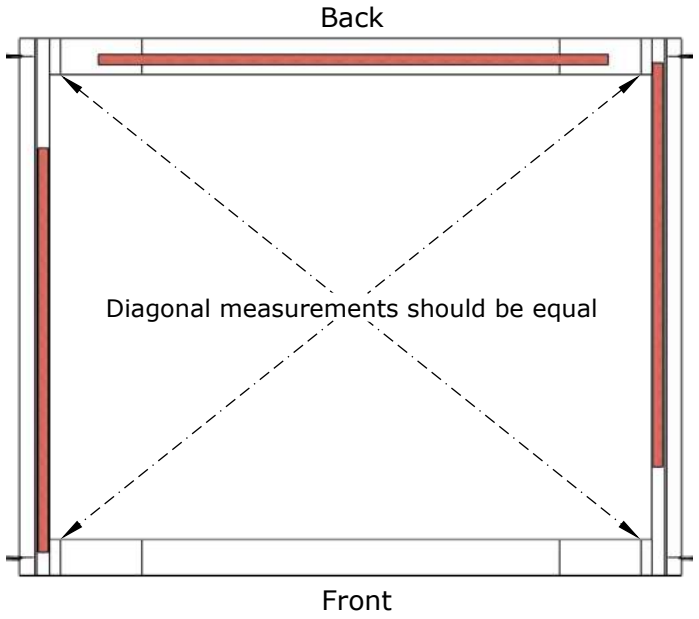
Back
Diagonal measurements should be equal
Front

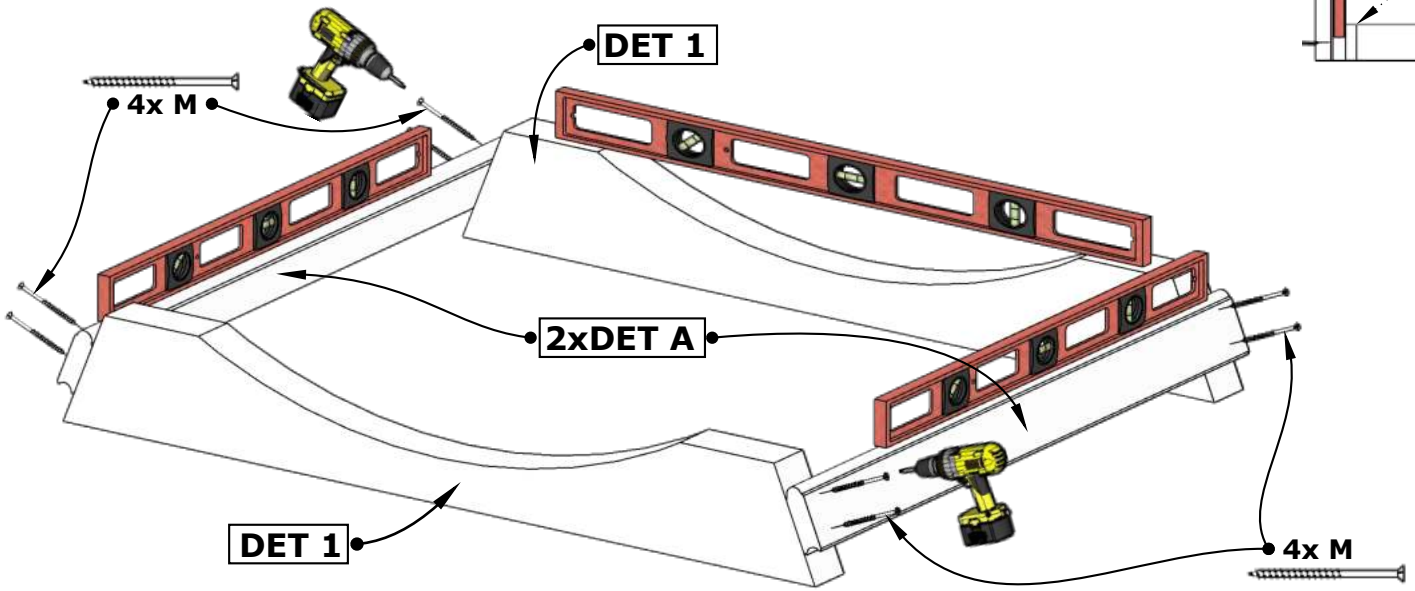
4x M
DET 1
2xDET A
DET 1
4x M

EE6G Barrel Sauna 63D" x 90H"

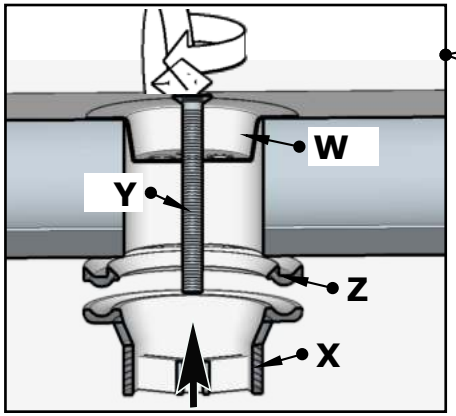

Center stave 2 on cradle 1

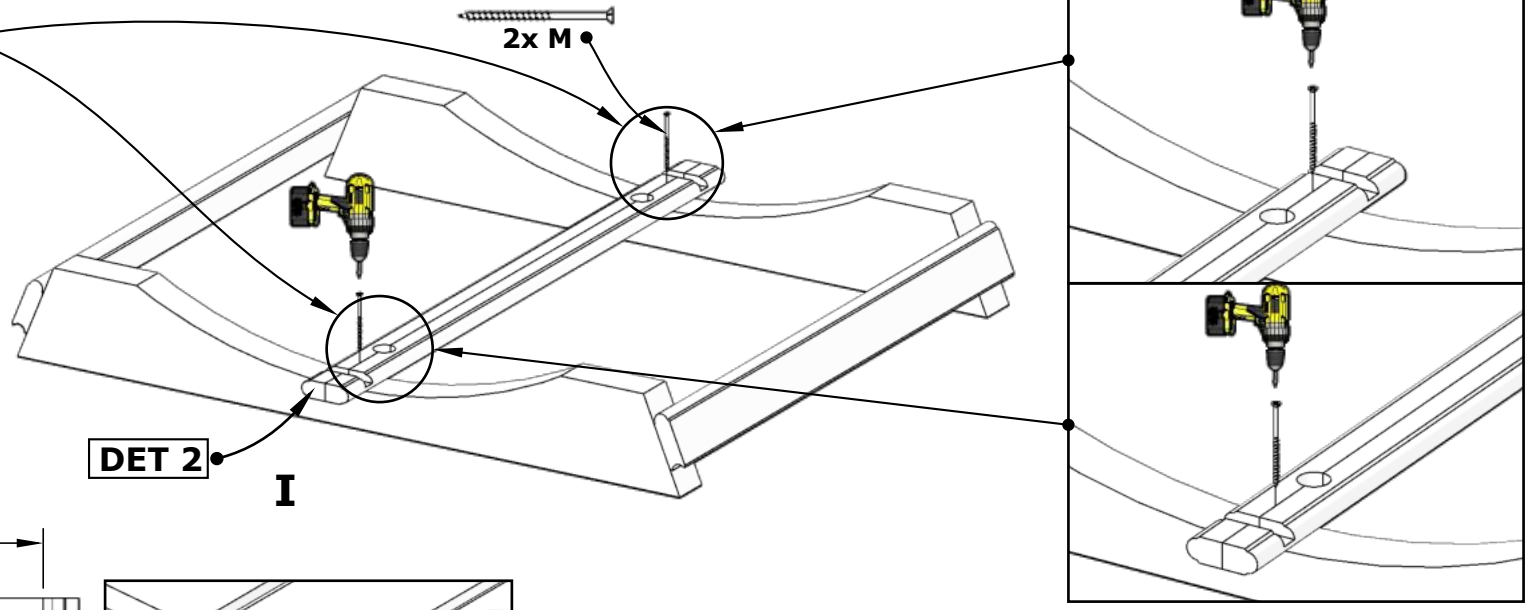

I

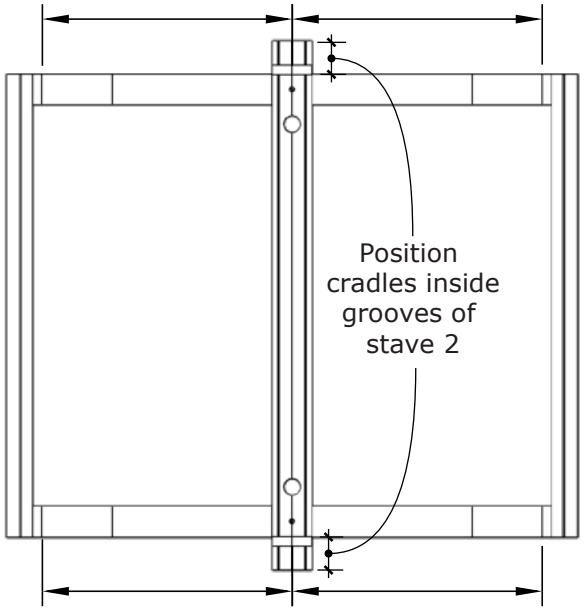

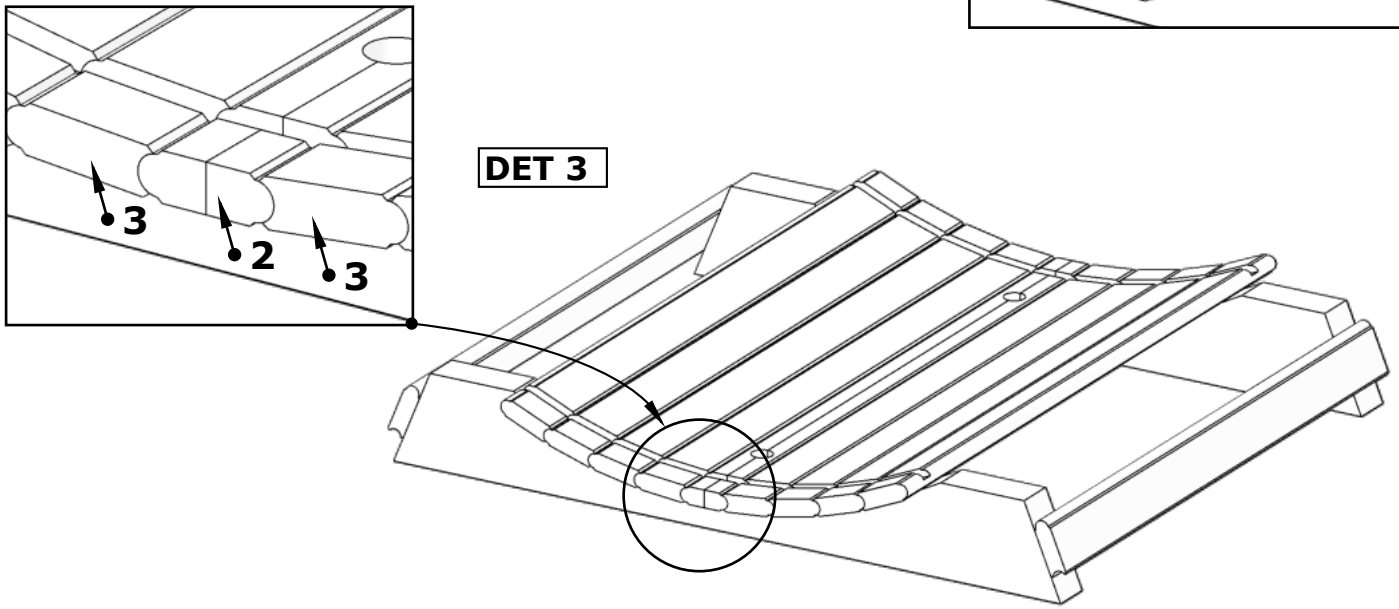

II

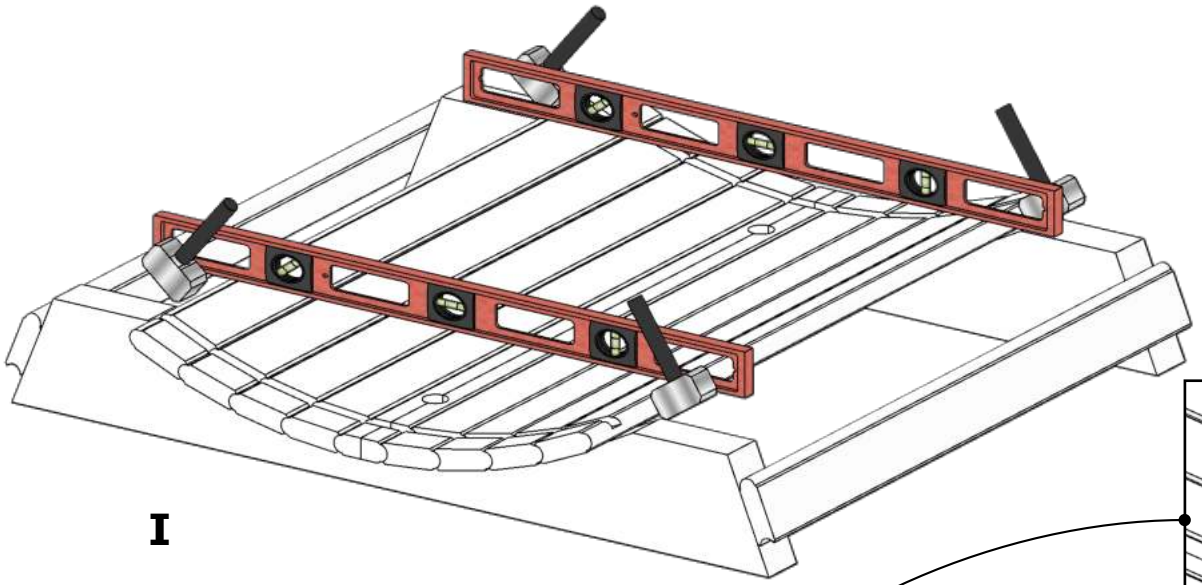

I

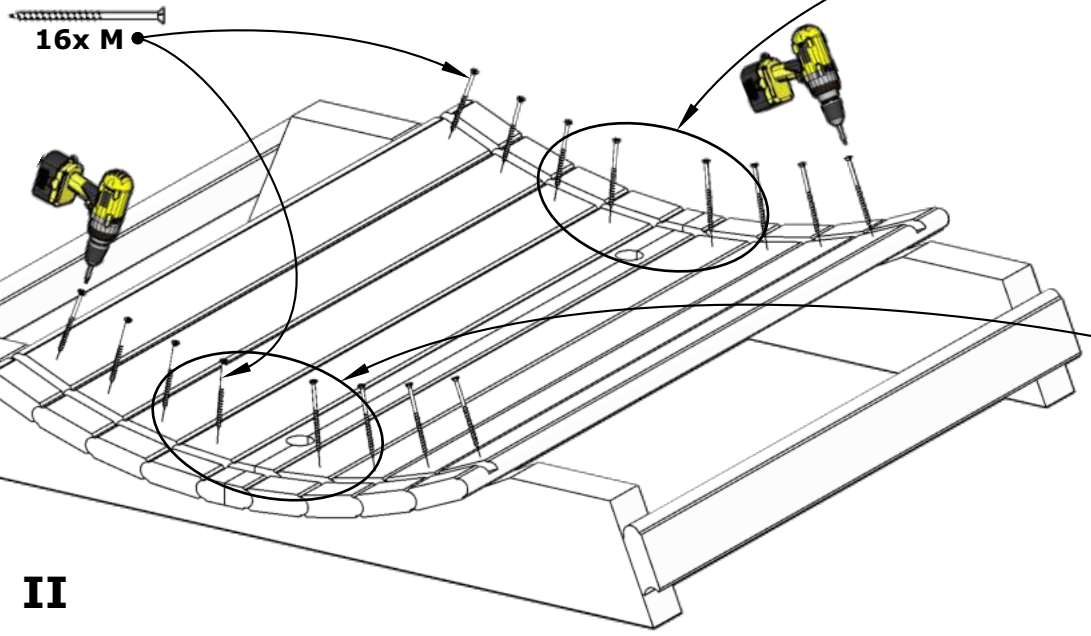

II

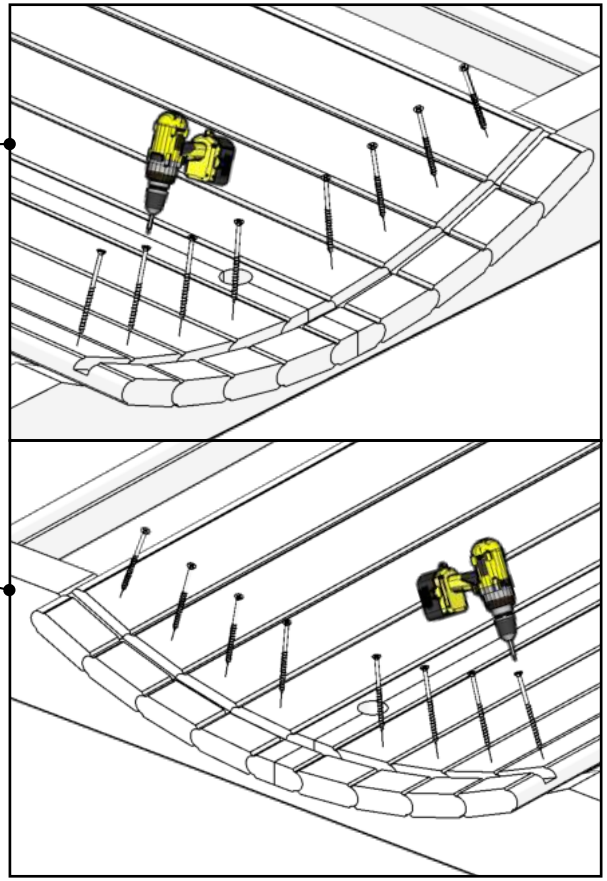

EE6G Barrel Sauna 63D" x 90H"

Drill 4 holes .50"
through DET 2
outside

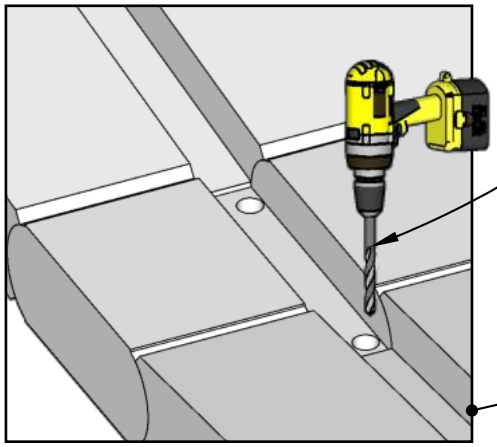

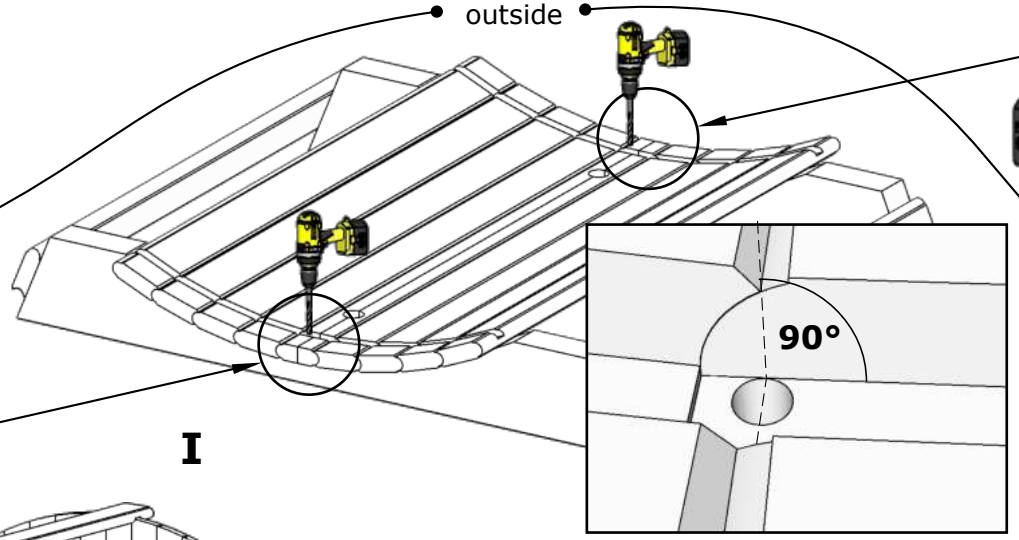

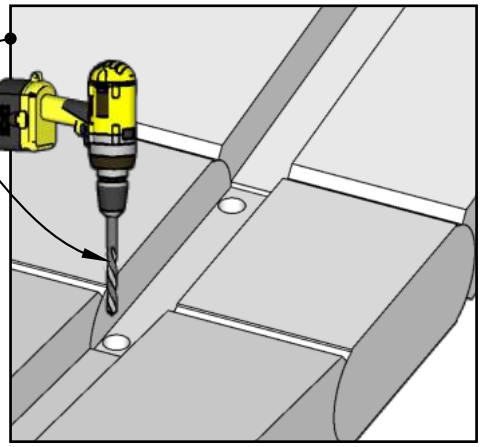

I

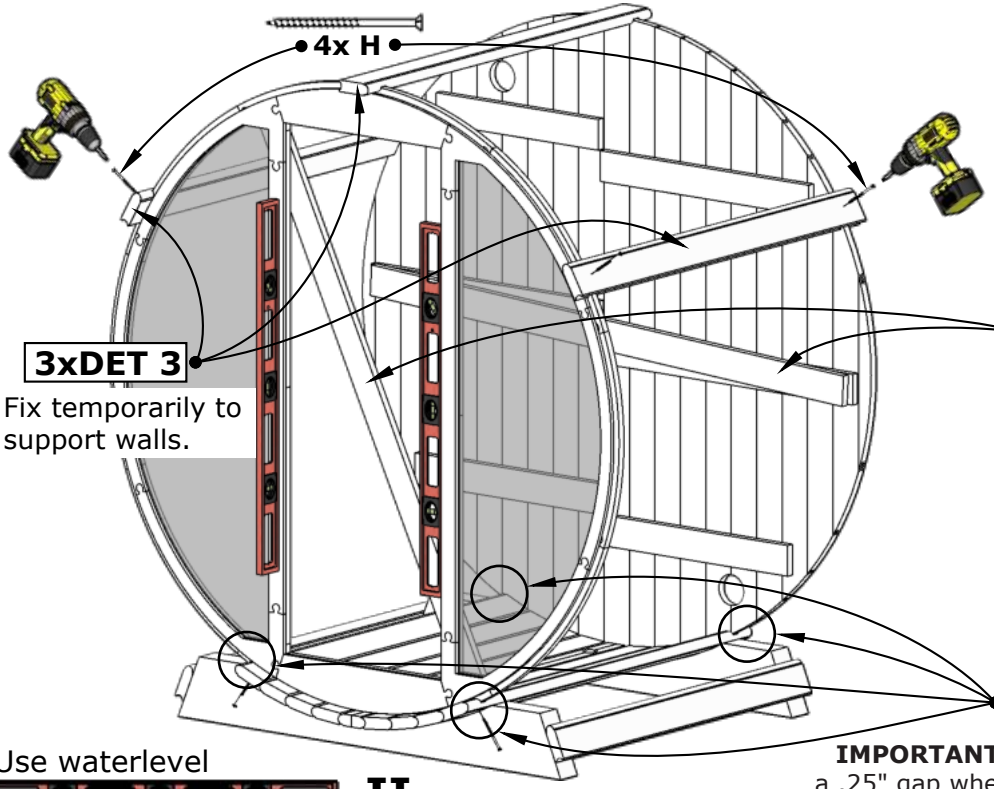

Fix temporarily to
support walls.

Check walls installation manual on extra pages!

Sauna wall configuration depends on Your model!

Use waterlevel



II

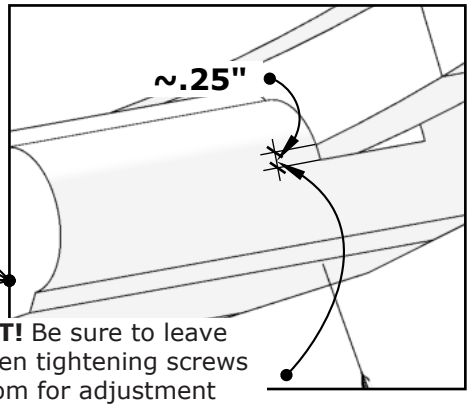

IMPORTANT! Be sure to leave a .25" gap when tightening screws to leave room for adjustment when the outer bands (B) are installed.

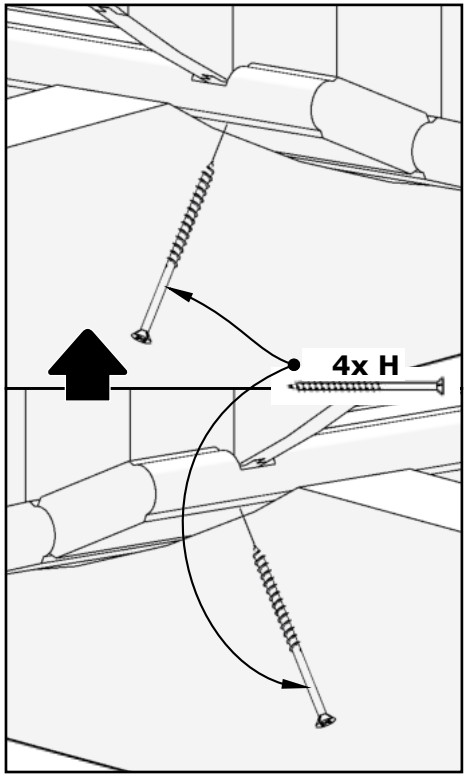

EE6G Barrel Sauna 63D" x 90H"

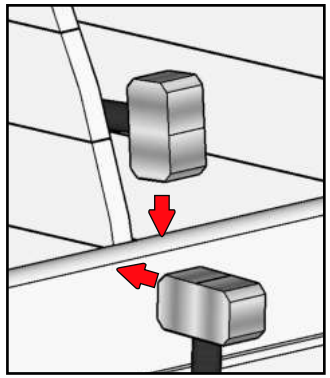

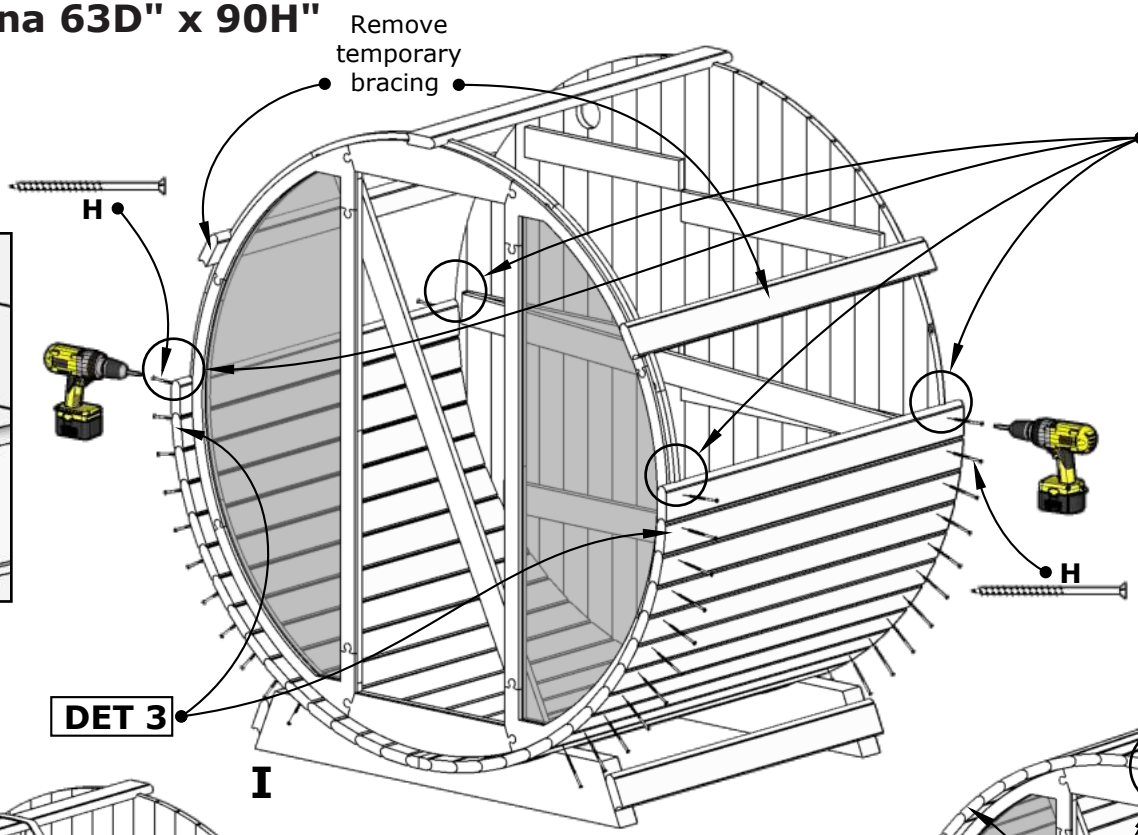

I

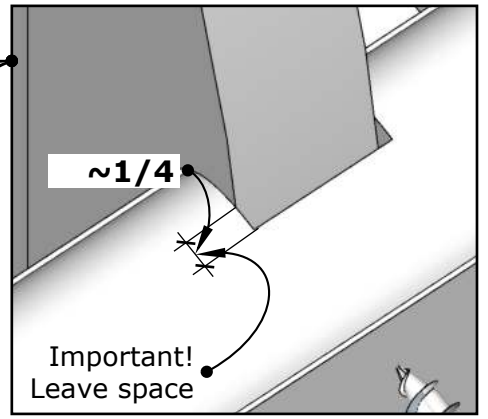

IMPORTANT! Be sure to leave a .25" gap when tightening screws to leave room for adjustment when the outer bands (B) are installed.

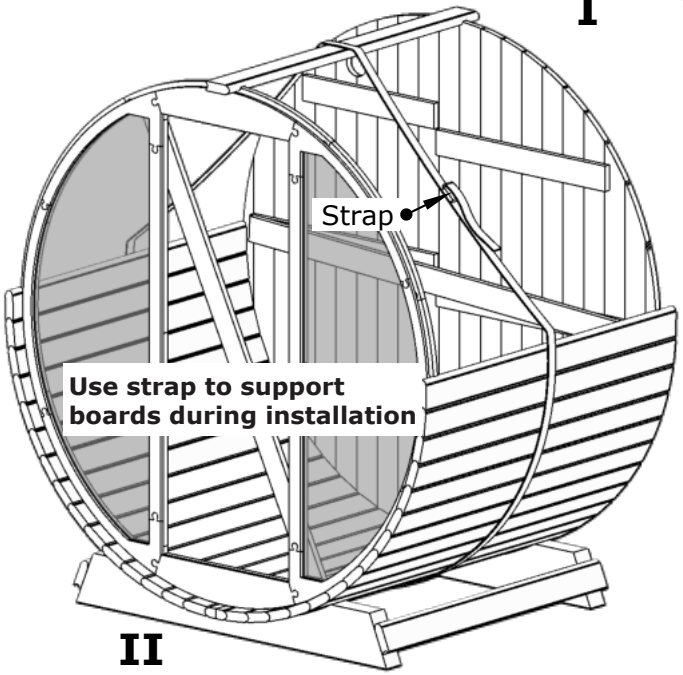

II

See the next page.

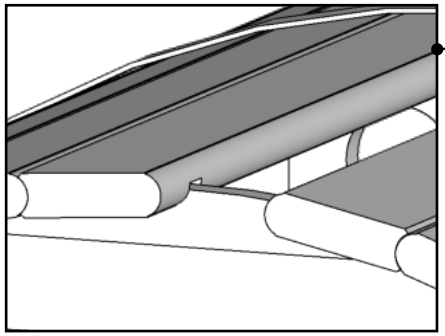

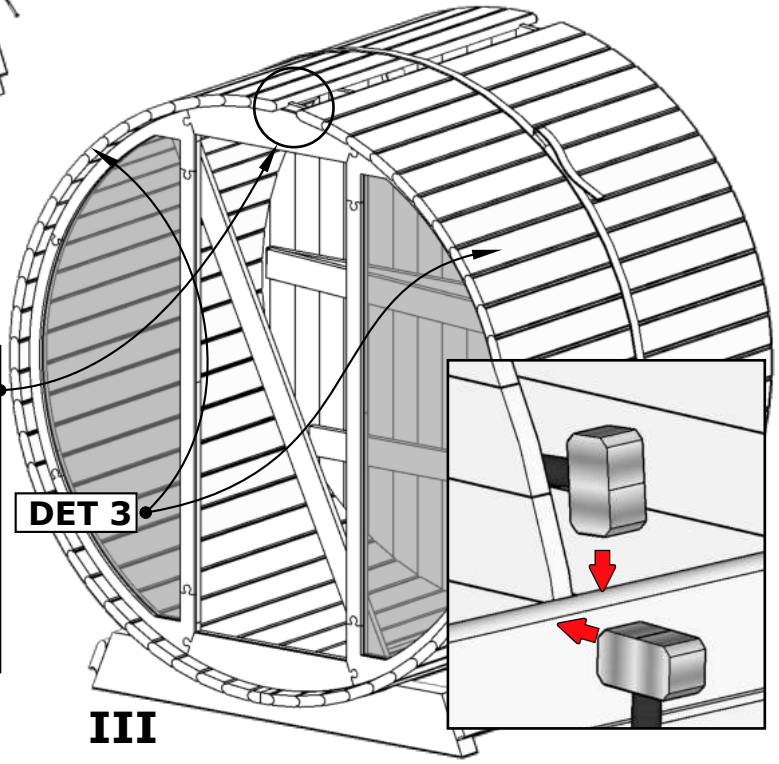

III

EE6G Barrel Sauna 63D" x 90H"

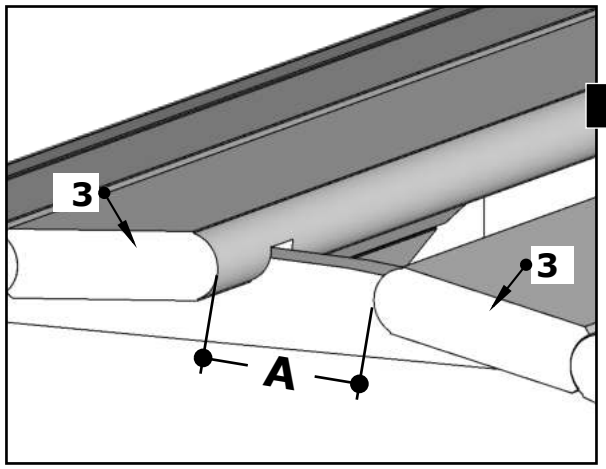

I

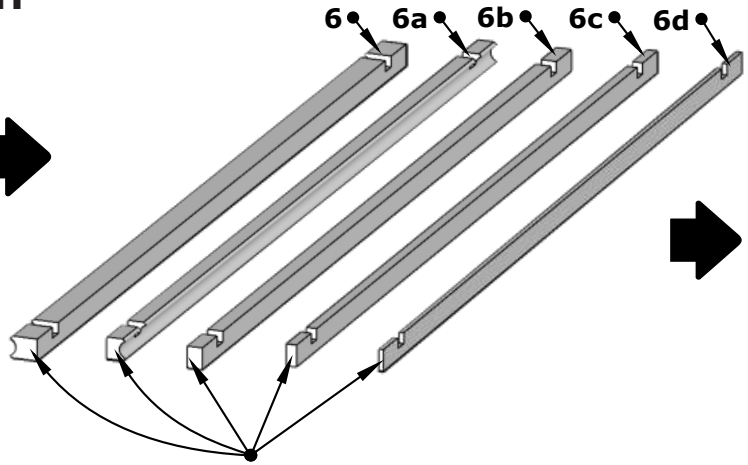

Join two boards together (as shown in diagram II) that will bridge the width of the "A" gap. It is recommended that the combined boards are approximately .25" wider than the gap.

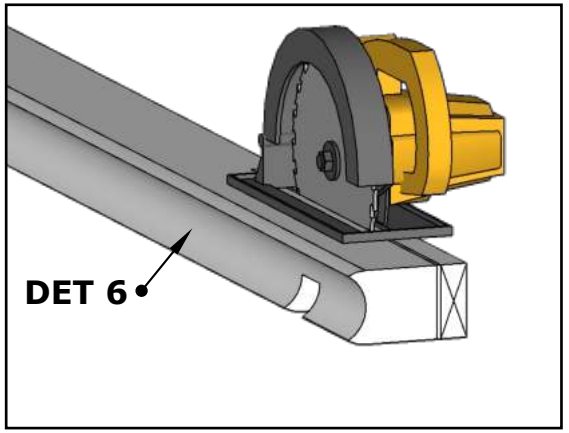

If needed, trim the flat edge of the board to create the desired width.

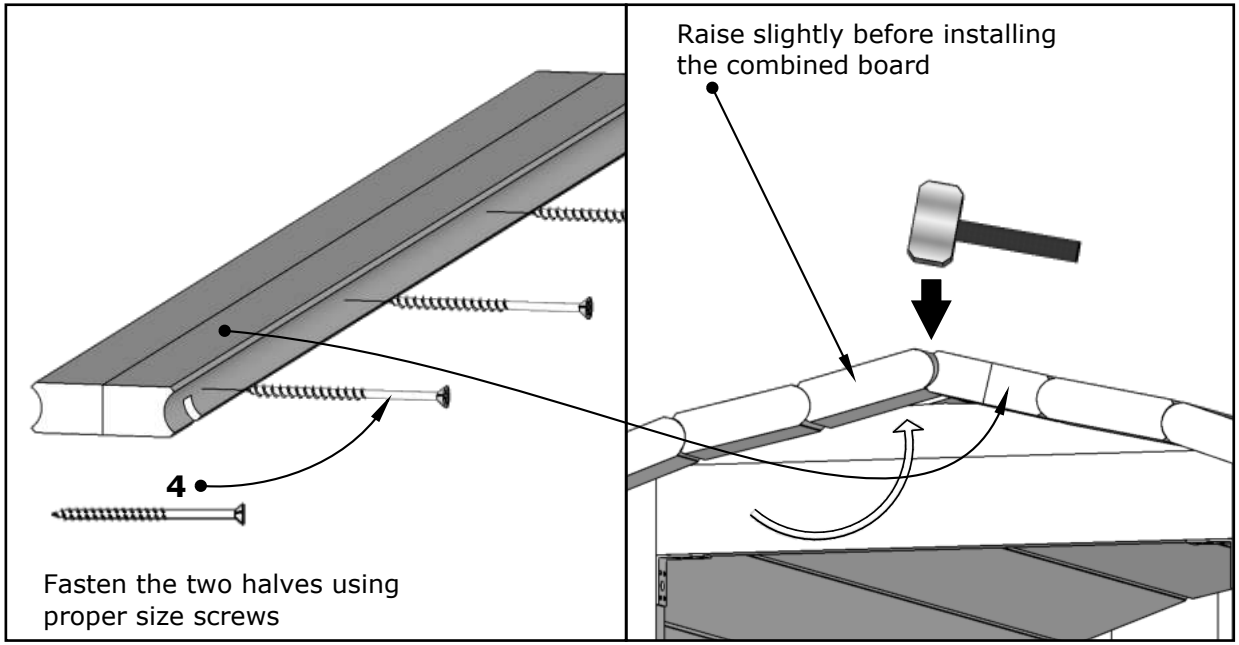

II

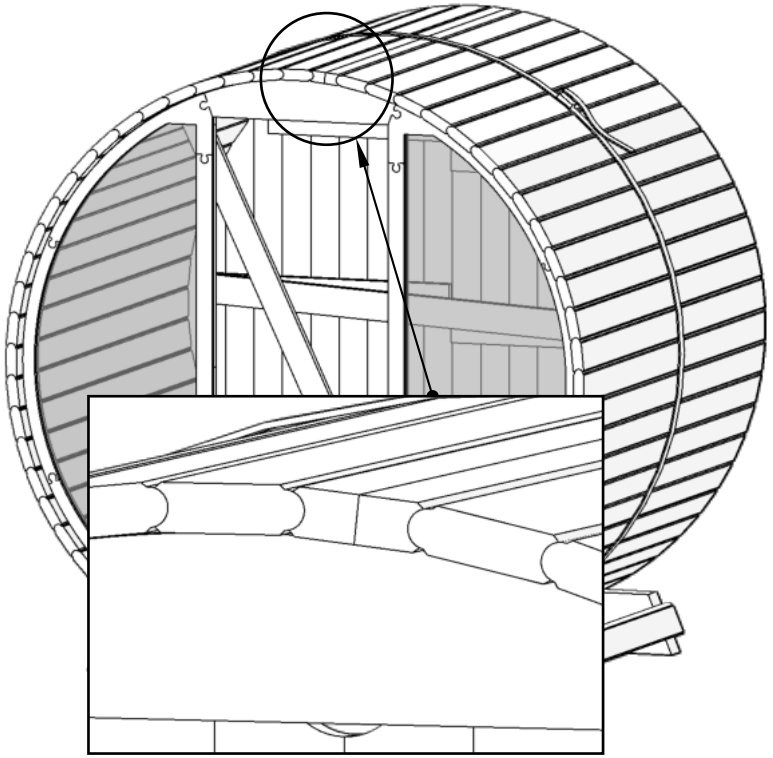

III

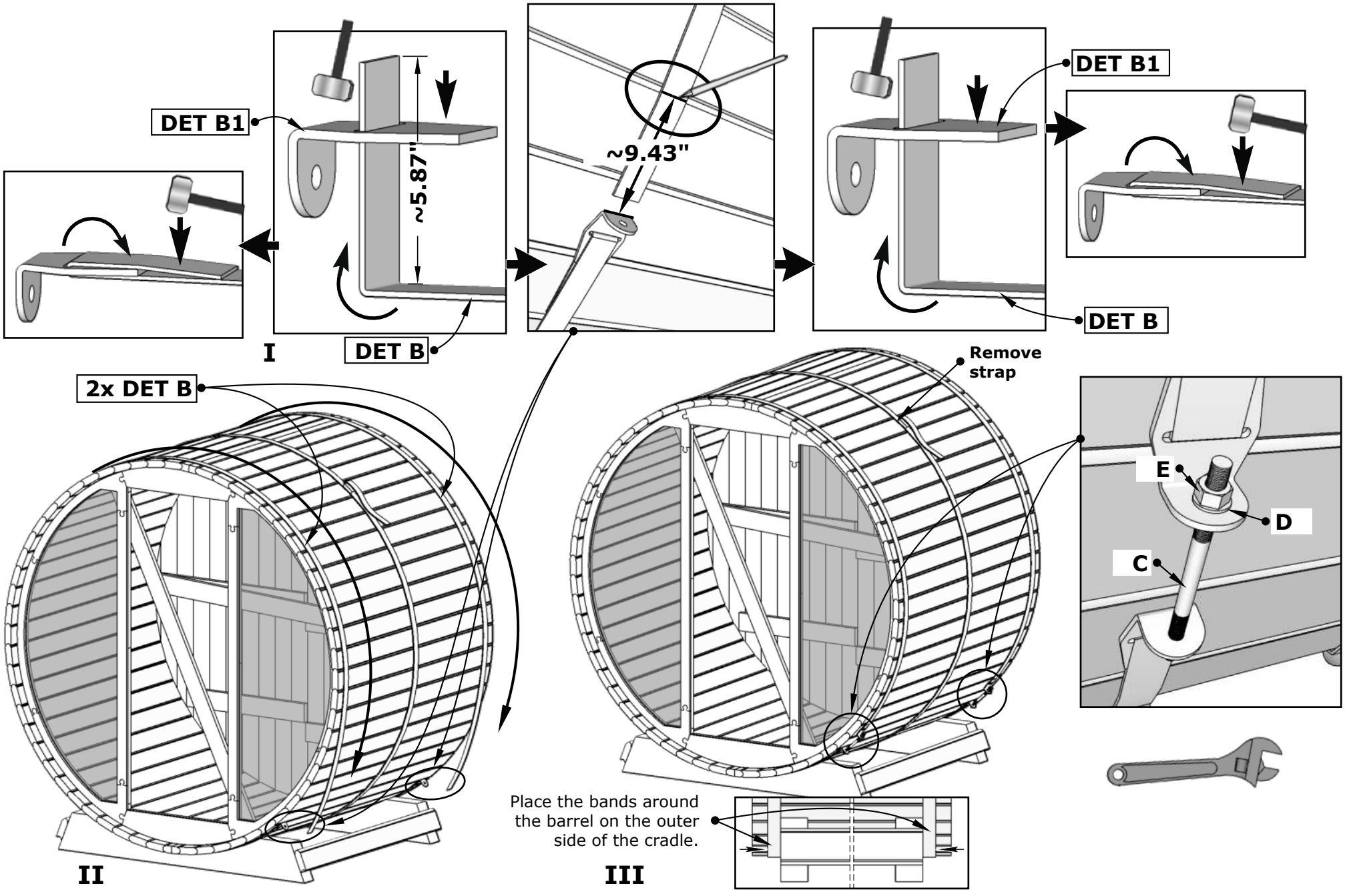
DET B1
~5.87"
DET B
I
~9.43"
DET B1
DET B
2x DET B
II
Remove strap
E
D
C
Place the bands around the barrel on the outer side of the cradle.
III

EE6G Barrel Sauna 63D" x 90H"

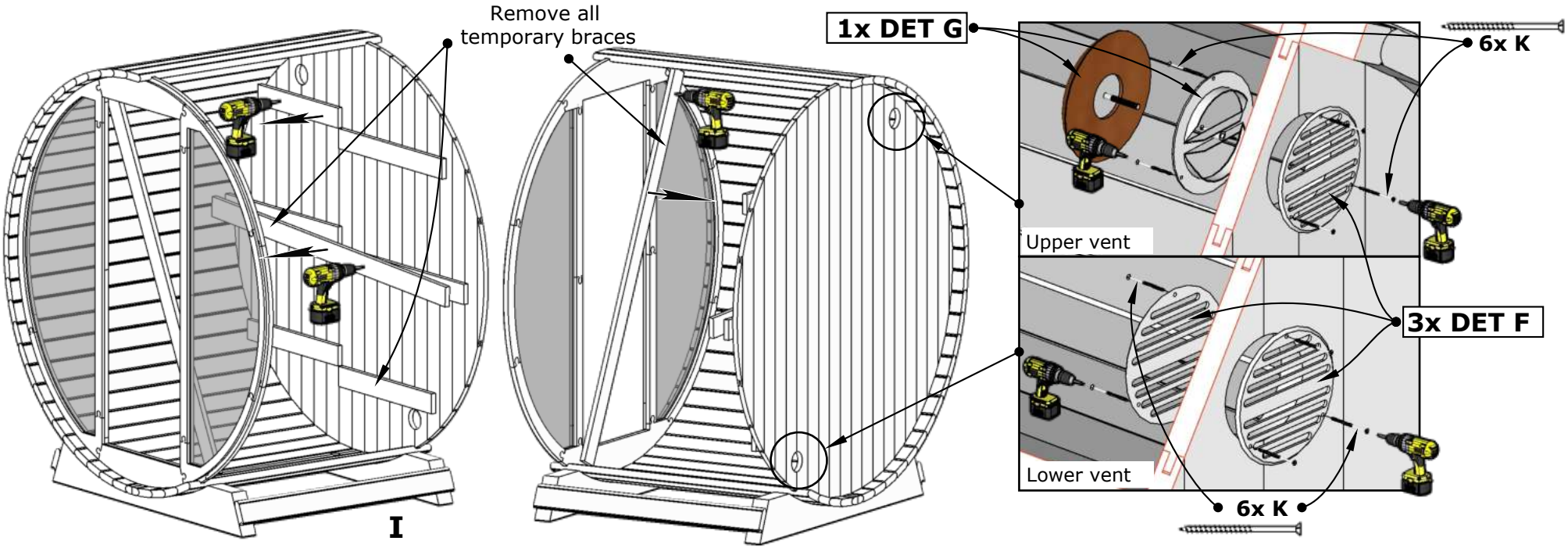

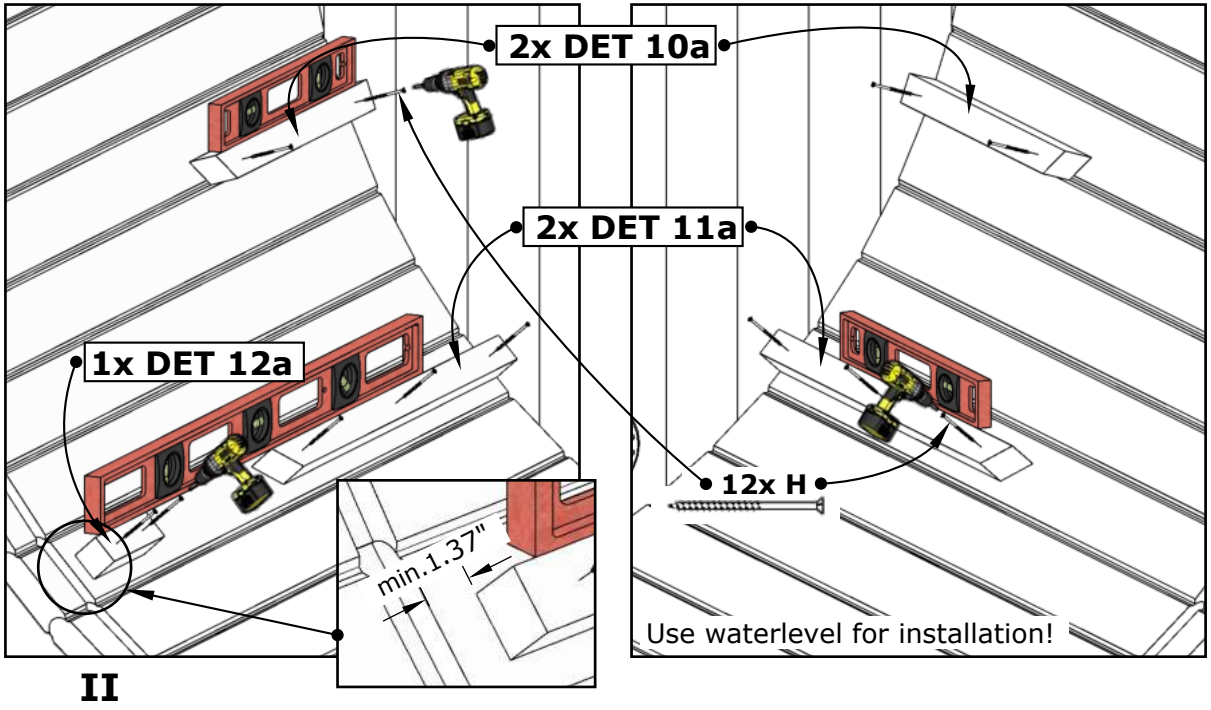

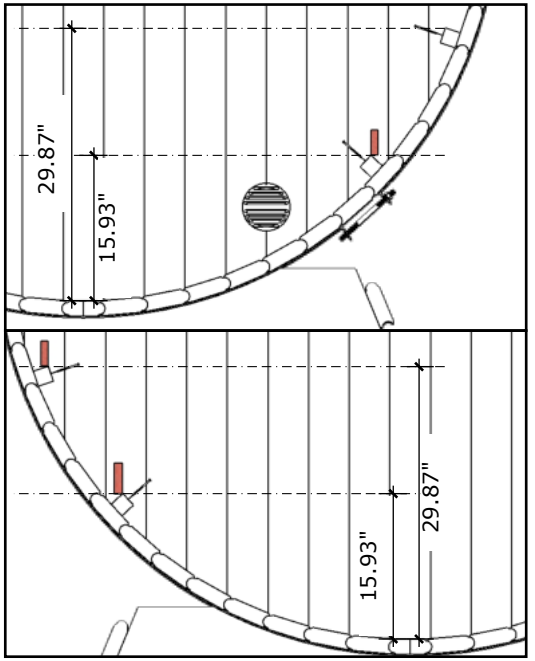

Use waterlevel for installation!

EE6G Barrel Sauna 63D" x 90H"

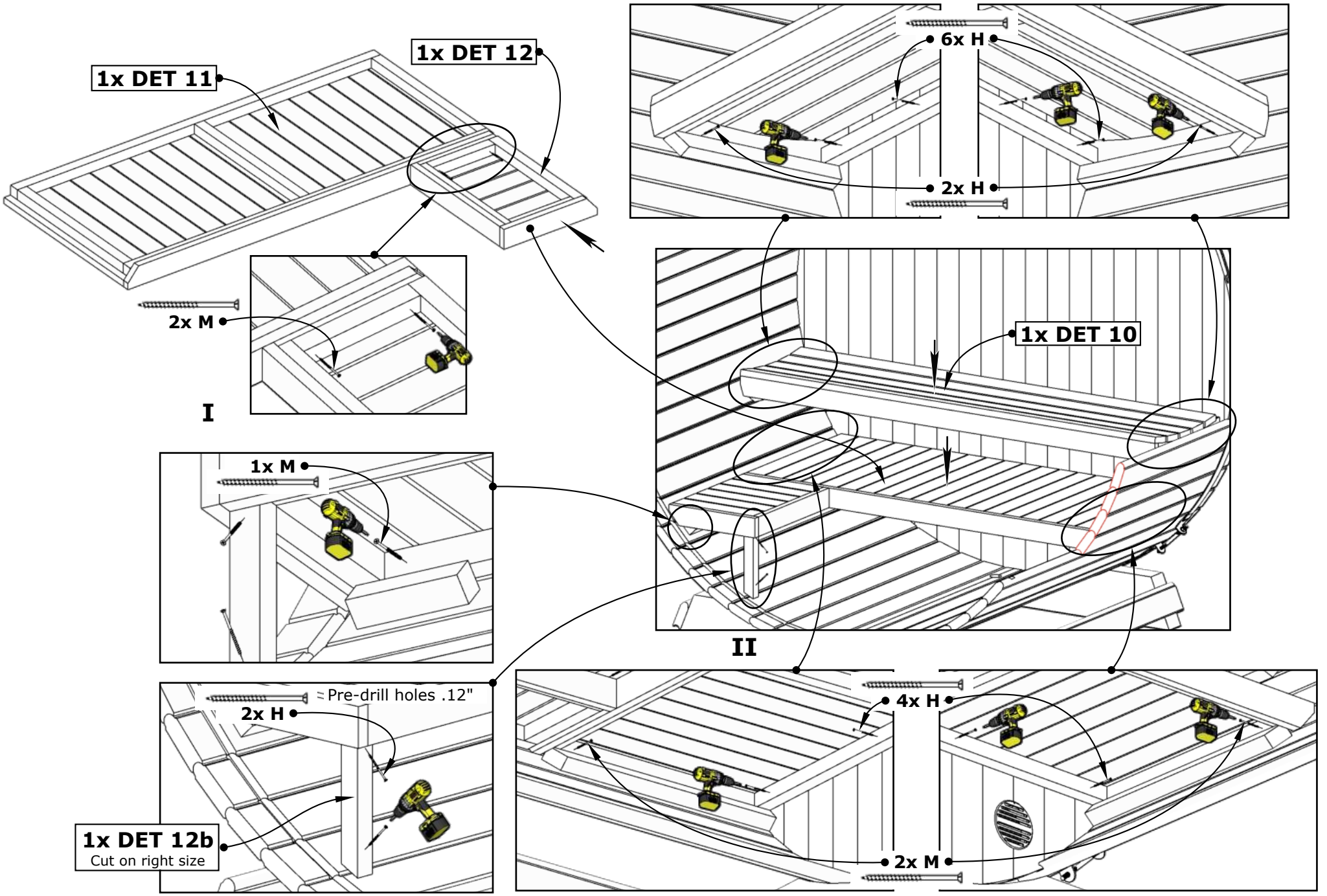

EE6G Barrel Sauna 63D" x 90H"

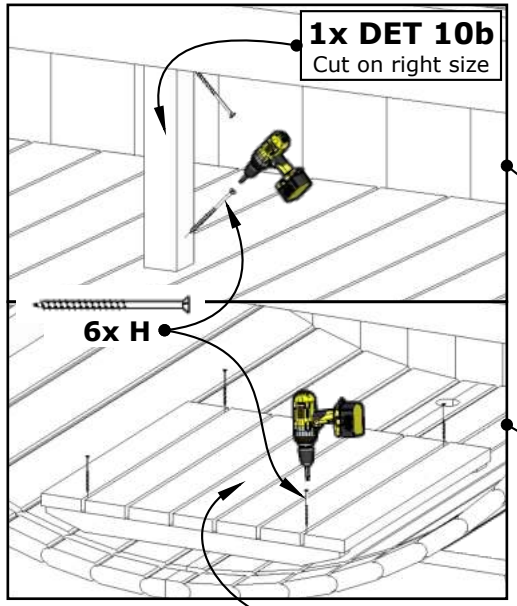

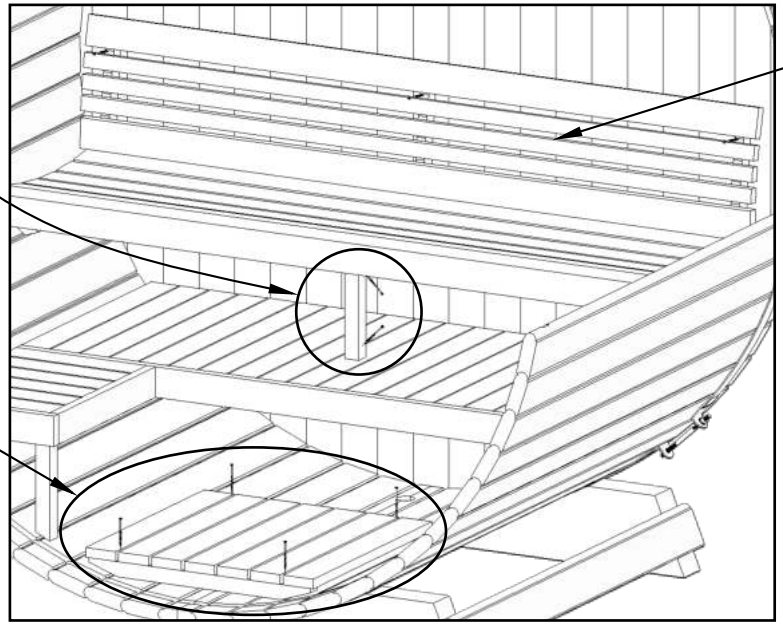

I

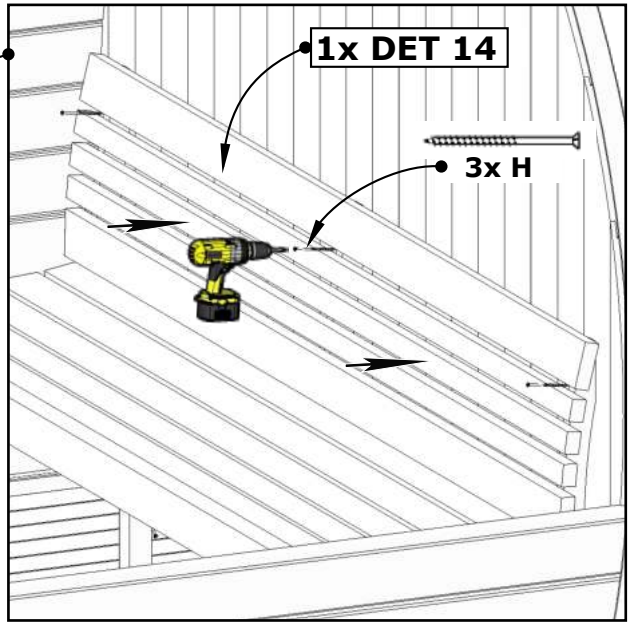

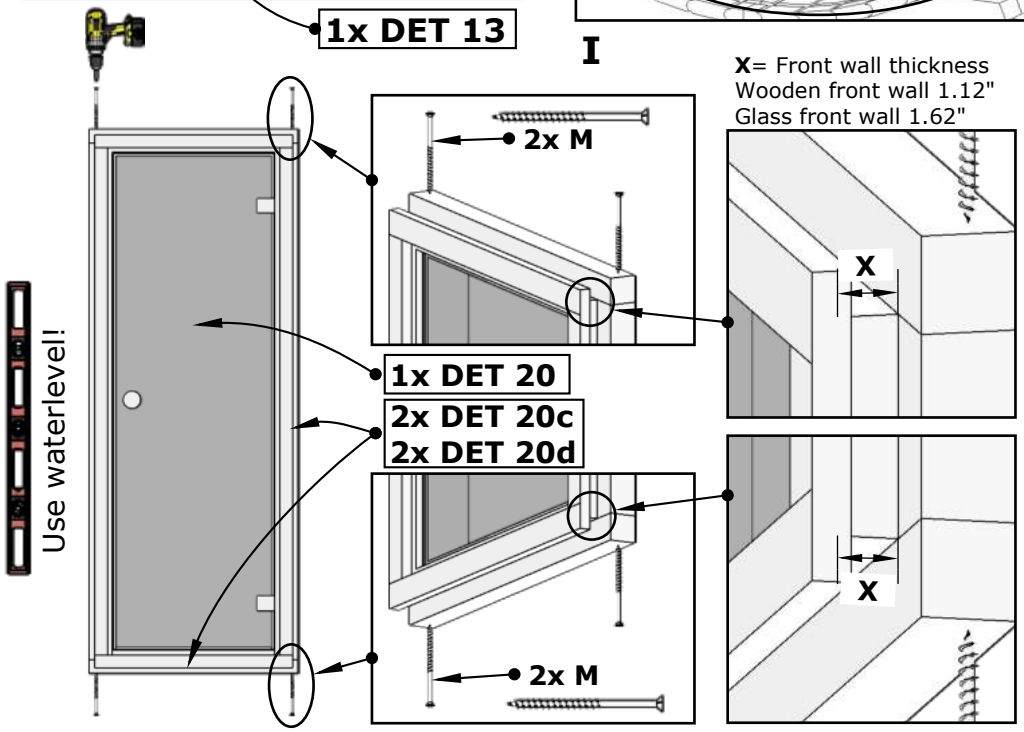

II

X= Front wall thickness
Wooden front wall 1.12"
Glass front wall 1.62"

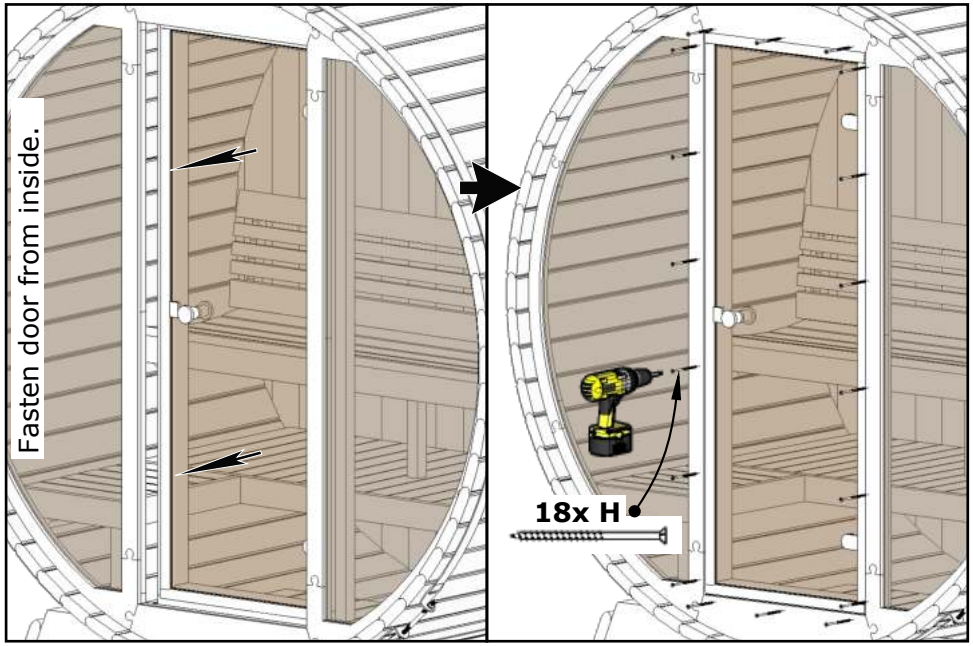

EE6G Barrel Sauna 63D" x 90H"

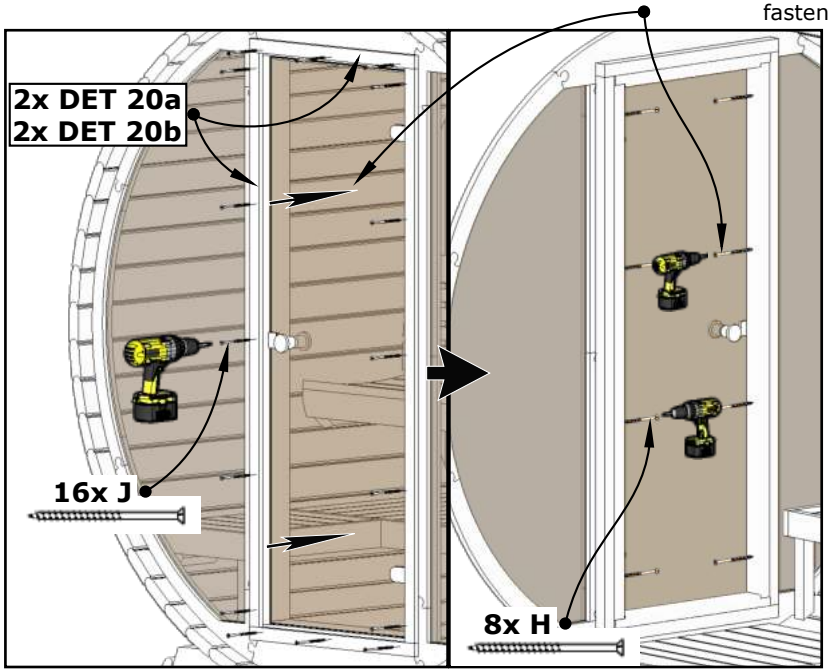

I

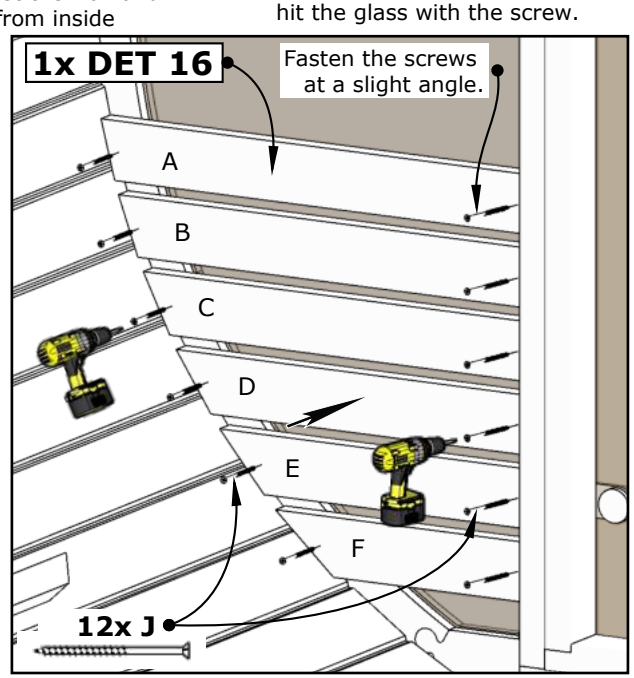

II

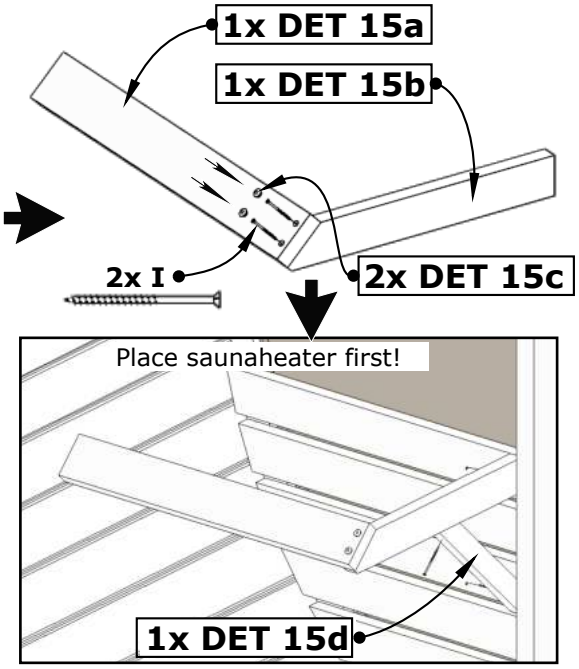

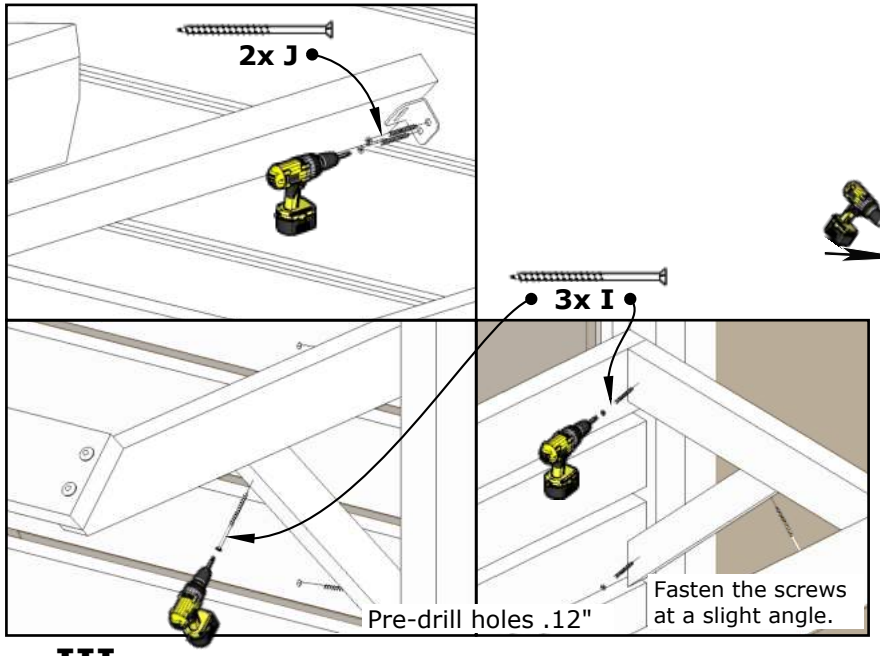

III

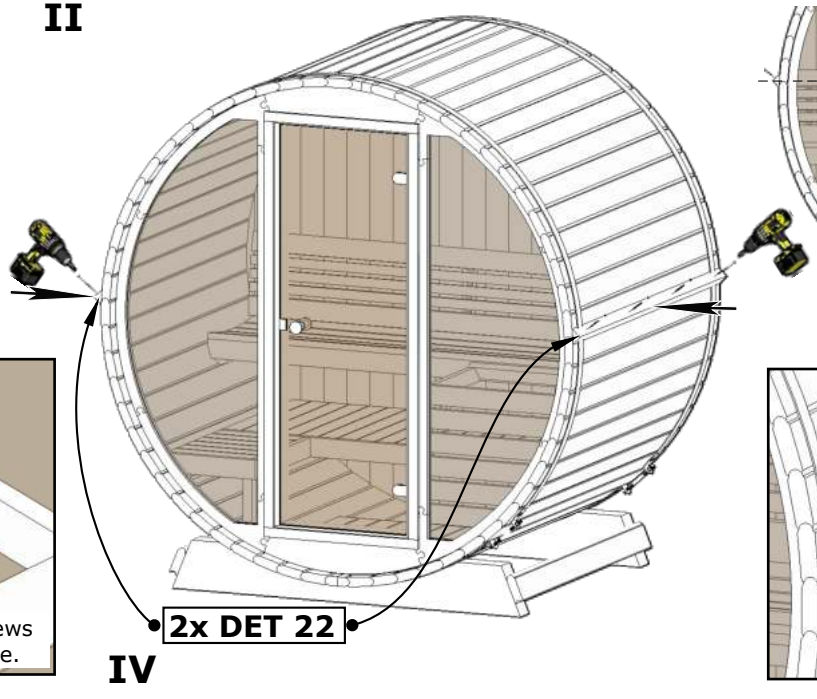

IV

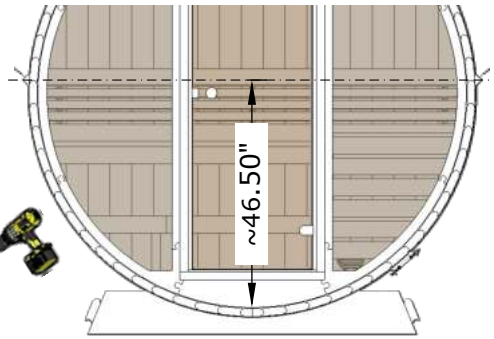

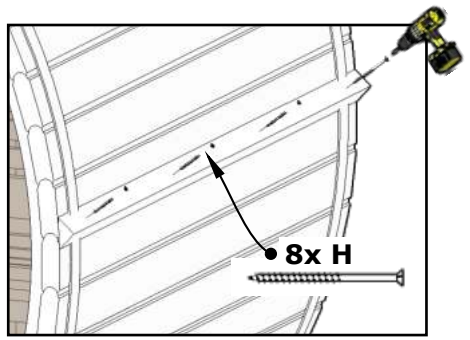

EE6G Barrel Sauna 63D" x 90H"

NB! Check also shingles installation manual inside shingles package.

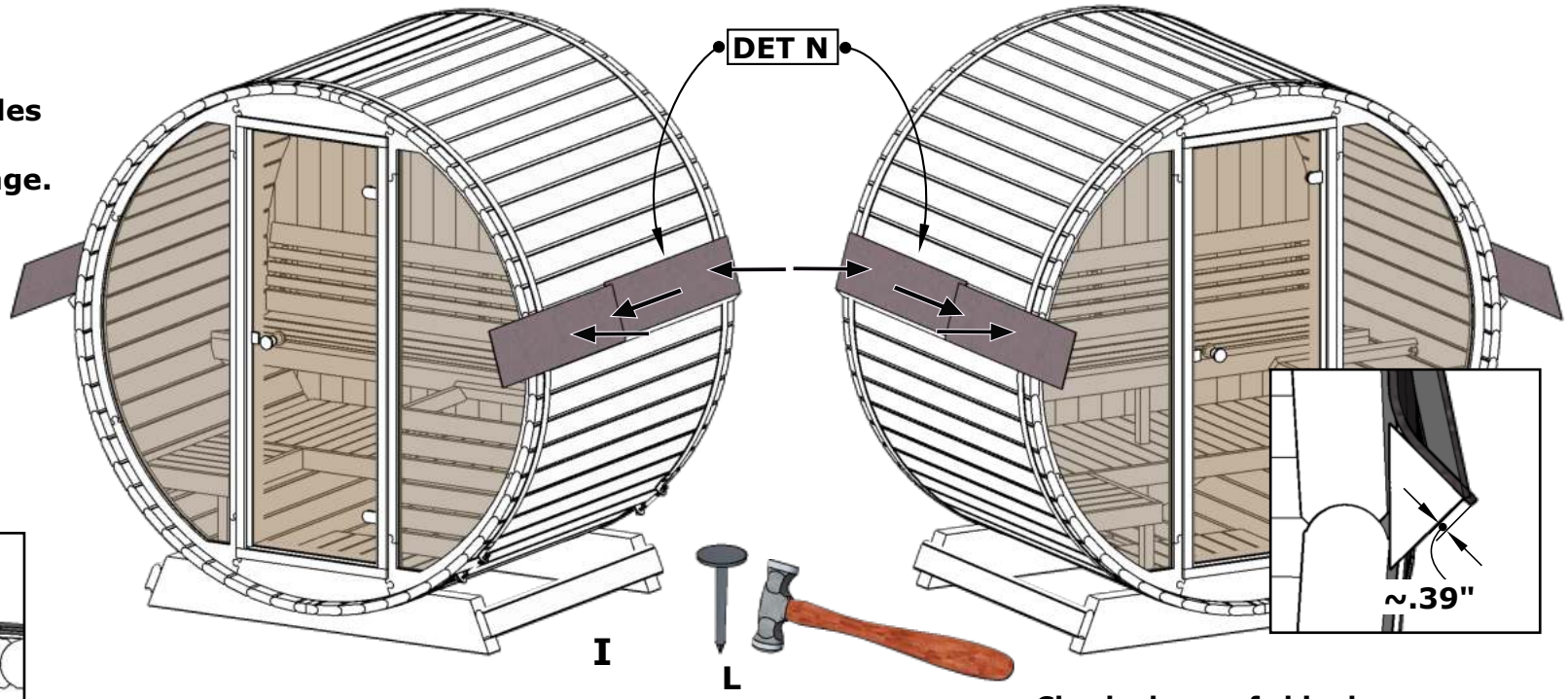

I

L

Check also roof shingles installation manual inside package.

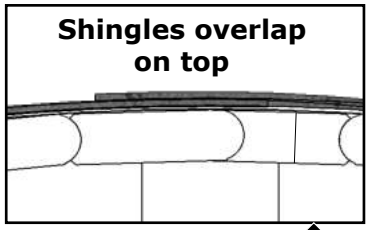

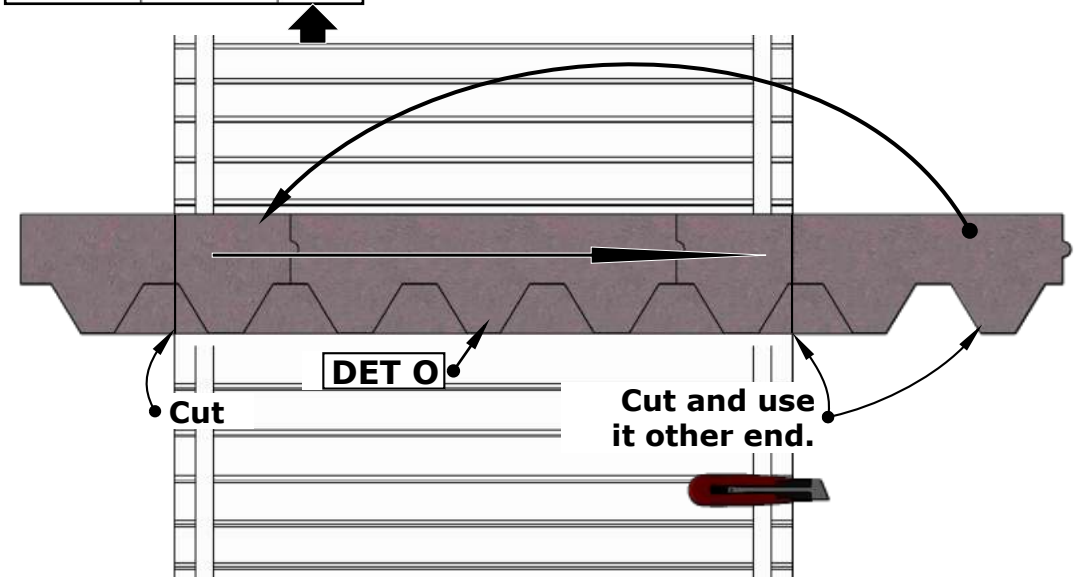

II

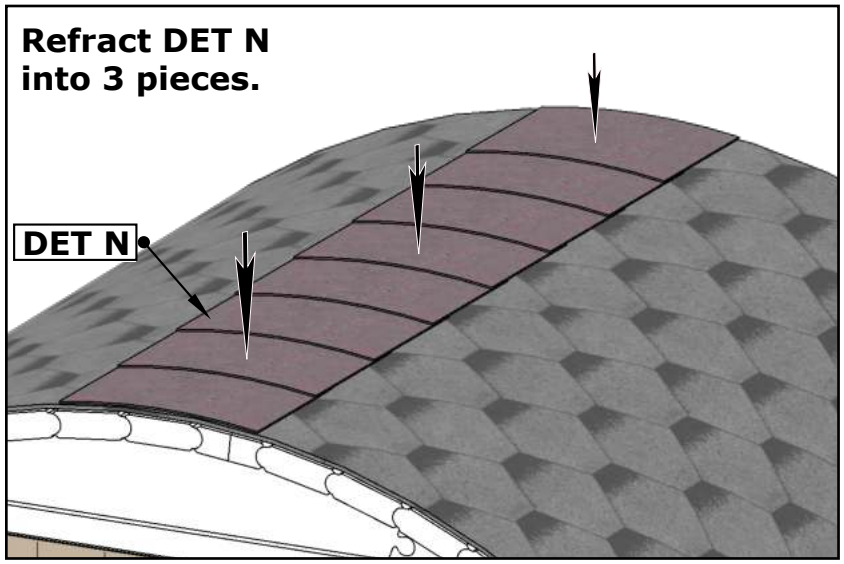

III

EE6G Barrel Sauna 63D" x 90H"

